RECEIVED
TOWN CLERK'S OFFICE
WRENTHAM, MA

2024 FEB -8 PM 12:01

TOWN OF WRENTHAM
PLANNING BOARD

DECISION

SPECIAL PERMIT (SP 2023-09) & SITE PLAN APPROVAL
WAREHOUSE
275 Green Street, Wrentham, MA

Applicant:	Simeone Associates Limited Partnership 56 Colpitts Road, Weston, MA 02493
Owner:	Same as Applicant
Location:	275 Green Street, Wrentham MA Assessor's Parcel Id# J-03-02-03
Zoning District:	• Commercial-Industrial 2 (C-2) • Aquifer Protection Overlay (A) • Watershed Protection Overlay (W)
Permits Sought:	Article (WGC) — Permit Required 390-4.2.F.4 — Special Permit / Site Plan Approval: Warehouse / Storage Facility (342,735 sf) 390-7 — Site Plan Approval 390-9 — Special Permit 390-14.1 — Earth Removal (~216,000 cy) 275 — Earth Removal, General Bylaw 351 — Stormwater Management Approval (separate decision) *WGC=Wrentham General Code*
Application Date:	May 18, 2023
Public Hearing Dates*:	06/21/23, 07/19/23, 08/02/23, 08/16/23, 09/06/23, 09/20/23, 10/04/23, 10/18/23, 11/01/23, 11/15/23, 12/06/23, 01/03/24, 02/07/24

DECISION of the Planning Board of the Town of Wrentham, Massachusetts (hereinafter the Board) on the petition of Simeone Associates Limited Partnership (hereinafter the Owner/Applicant) for Special Permits and Site Plan Approval for Use and Earth Removal to construct a new 342,735 square foot (sf) warehouse building with office space & associated site improvements on the parcel 275 Green Street, shown on Wrentham Assessors Map Parcel Id# J-03-02-03, located in the Commercial-Industrial 2 (C-2) zoning district and owned by Simeone Associates Limited Partnership by deed recorded in the Norfolk County Registry of Deeds (NCRD) in Book 32401, Page 438 (hereinafter the Site).

BACKGROUND

The above-referenced application for a Special Permits and Site Plan Approval (hereinafter Application) was formally received on May 18, 2023. Notice of the public hearing and the subject matter thereof was published in the Sun Chronicle on June 6 and 13, 2023, posted with the Town Clerk's Office on May 22, 2023, and abutters were notified by First Class Mail. The public hearing on the Application was opened on June 21, 2023, and continued to July 19 (no testimony), August 2 (no testimony), August 16 (no testimony), September 6 (no testimony), September 20, October 4, October 18, November 1, November

**Pursuant to the Governor's Executive Order of March 29, 2023, Extending the Suspension of Certain Provisions of the Open Meeting Law, G.L. c.30A §18, as amended, the Town of Wrentham Planning Board conducted their public hearings via remote participation.*

15, December 6 (no testimony), December 20 (no testimony), and January 3, 2024 (no testimony), February 7, 2024 (closed). During the public hearing, all those wishing to speak were heard. Following public input, the hearing was closed on February 7, 2024.

The following Planning Board members were present throughout the public hearing: Chairperson Michael McKnight (absent 06/21/23), Vice Chairperson Charles Woodhams, Jr., Clerk James Lawrence (absent 10/18/23), Members Robert Cass, Robert English, Everett Skinner, Jr. (absent 10/18/23), and Thomas Wrynn (absent 09/20/23). Mr. McKnight, Mr. Wrynn, Mr. Skinner, and Mr. Lawrence all completed a Mullin's Certificate for their respective absences to remain eligible to vote on this application (Exhibit #14, #34, #39, #40). At the public hearing, Dana Clow, P.E. of Advanced Concepts Engineering, and Mark Noonan of Highpoint Engineering (hereinafter the "Engineers") presented the Application. The record of proceedings and submission upon which this decision is based may be referred to in the Planning & Community Development Office or the Town Clerk's Office.

SUBMITTALS

The following items were submitted as Exhibits to the Board for its consideration of this application:

1. Application packet submitted by Advanced Concepts Engineering Corp. on 05/18/23, including the following:
    - Application for Special Permit/Site Plan Approval; dated 04/30/23; 3 pages
    - Checklist for Article 7; undated; 3 pages,
    - Waiver Request Forms, dated 04/30/23; 9 pages,
    - Mitigation of Adverse Impact; dated 04/30/23; 1 page,
    - Community & Environmental Impact Assessment Report; undated; 4 pages,
    - Checklist for Article 8; undated; 1 page,
    - WPA Form 4B-Order of Resource Delineation; dated 12/21/22; 5 pages,
    - Quitclaim Deed; dated 04/11/14; 6 pages
2. Certified Abutters List; dated 04/11/23; received 05/15/23; 3 pages
3. Narratives
    - 3A Narrative for Special Permit Articles 4 & 15; dated 04/30/23; received 05/15/23; 5 pages
    - 3B Narrative for Earth Removal; dated 04/30/23; received 05/15/23; 5 pages
4. Landscape Plans prepared by Radner Design Associates, Inc. entitled "Industrial Development – 275 Green Street, Wrentham, MA"; dated 04/30/23, received 05/22/23, 24"x36" & 11"x17", color, 4 sheets to include:
    - Notes & Details
    - Parking Lot Landscape Calculation
    - Parking Lot Shading Calculation Plan
    - Planting Plan
5. Location Plan prepared by Advanced Concepts Engineering, undated, received 05/15/23, black & white, 11'x17", 1 sheet Location Plan prepared by Advanced Concepts Engineering Corp., 11"x17", black & white; 1 page
6. Site Plan, entitled "Proposed Site Plan for Warehouse Development" prepared by Advanced Concepts Engineering, dated 04/30/23, black & white, 24"x36", 14 sheets including:
    - C1.0 Cover sheet
    - C6.2, Construction Notes & Details 3
    - C2.0, Existing Conditions Plan
    - C7.0, Sedimentation & Erosion Control Plan
    - C3.0, Layout and Zoning Plan
    - C8.0, Erosion Control Notes & Details

- C4.0, Drainage and Utilities
- C5.0, Grading Plan
- C6.0, Construction Notes & Details 1
- C6.1, Construction Notes & Details 2
- L0.0, Landscape Notes & Details
- L1.0, Landscape Parking Lot Shading Calculation Plan
- L1.1, Landscape Parking Lot Landscaping Calculation
- L2.0, Landscape Planting Plan

7. Traffic Impact & Access Study prepared by Bayside Engineering, dated 04/28/23, received 05/15/23, 279 pages
8. Stormwater Report prepared by Advanced Concepts Engineering, dated 04/30/23, received 05/15/23, 427 pages
9. Public Hearing Notice for 06/21/23 Planning Board Meeting, stamped 05/22/23, 1 page
10. Department Comments - Assessor, dated 06/18/23, received 06/20/23, 2 pages
11. Department Comments - Fire Chief, dated/received 06/21/23, 1 page
12. Department Comments - Water Division, dated/received 06/21/23, 1 page
13. DPW Director Antonioli Comments, dated/received 06/21/23, 1 page
14. Mullins Form Completed by Michael McKnight, dated/received 07/05/23, 1 page
15. Traffic Peer Review prepared by McMahon, dated/received 07/13/23, 7 pages
16. Peer Review – Zoning & Stormwater, completed by Beals & Thomas, dated 07/14/23, received 07/18/23, 14 pages
17. Public Hearing Continuance Request, dated/received 07/19/23, 1 page
18. Public Hearing Continuance Request, dated 07/31/23, received 08/01/23, 1 page
19. Public Hearing Continuance Request, dated/received 08/09/23, 1 page
20. Highpoint Engineering Response to Comments, dated 08/28/23, received 08/29/23, 12 pages
21. Revised Plan Set prepared by Advanced Concepts Engineering, dated 04/30/23, received 08/29/23, 14 sheets including:
    - C1.0, Cover Sheet
    - C2.0, Existing Conditions Plan
    - C3.0, Layout and Zoning Plan
    - C4.0, Drainage and Utilities Plan
    - C5.0, Grading Plan
    - C6.0, Construction Notes and Details 1
    - C6.1, Construction Notes and Details 2
    - C6.2, Construction Notes and Details 3
    - C7.0, Sedimentation & Erosion Control Plan
    - C8.0, Sedimentation & Erosion Control Notes & Details
    - L0.0, Landscape - Notes and Details
    - L1.0, Landscape - Parking Lot Shading & Calculation Plan
    - L1.1 Landscape – Parking Lot Landscape Calculation Plan
    - L2.0 Landscape – Planting Plan
22. Pre-Development HydroCAD Report prepared by Highpoint Engineering, dated 08/28/23, received 08/29/23, 61 pages
23. Post-Development HydroCAD Report prepared by Highpoint Engineering, dated 08/28/23, received 08/29/23, 102 pages
24. Supplemental Information prepared by Highpoint Engineering, undated, received 08/29/23, 73 pages
25. Public Hearing Continuance Request, dated/received 09/05/23, 1 page
26. Beals & Thomas Supplemental Review, dated 09/11/23, received 09/12/23, 20 pages
27. Traffic Response prepared by Bayside Engineering, dated 09/15/23, received 09/18/23, 150 pages
28. Highpoint Engineering 2nd Response to Comments, dated 09/15/23, received 09/18/23, 4 pages

29. Highpoint Engineering 2nd Supplemental Information, undated, received 09/18/23, 7 pages
30. Revised Plan Set entitled "Proposed Site Plan Warehouse Development" prepared by Advanced Concepts Engineering, dated 09/15/23, 16 sheets including:
    - C1.0, Cover Sheet
    - C2.0, Existing Conditions Plan
    - C3.0, Locus Plan
    - C4.0, Layout and Zoning Plan
    - C5.0, Drainage and Utilities Plan
    - C6.0, Grading Plan
    - C7.0, Construction Notes and Details 1
    - C7.1, Construction Notes and Details 2
    - C7.3, Construction Notes and Details 3
    - C7.4, Construction Notes and Details 4
    - C8.0, Sedimentation & Erosion Control Plan
    - C9.0, Sediment & Erosion Control - Notes & Details
    - L0.0 Notes & Details
    - L1.0 Parking Lot Shading Calculation Plan
    - L1.1 Parking Lot Landscape Calculation Plan
    - L2.0 Planting Plan
31. Beals & Thomas 2nd Supplemental Review, dated/received 09/26/23, 13 pages
32. Public Hearing Continuance Request, dated 09/26/23, received 09/27/23, 1 page
33. Revised Plan Set entitled "Proposed Site Plan Warehouse Development" prepared by Advanced Concepts Engineering, dated/received 09/27/23, 16 sheets including:
    - C1.0, Cover Sheet
    - C2.0, Existing Conditions Plan
    - C3.0, Locus Plan
    - C4.0, Layout and Zoning Plan
    - C5.0, Drainage and Utilities Plan
    - C6.0, Grading Plan
    - C7.0, Construction Notes and Details 1
    - C7.1, Construction Notes and Details 2
    - C7.3, Construction Notes and Details 3
    - C7.4, Construction Notes and Details 4
    - C8.0, Sedimentation & Erosion Control Plan
    - C9.0, Sediment & Erosion Control - Notes & Details
    - L0.0 Notes & Details
    - L1.0 Parking Lot Shading Calculation Plan
    - L1.1 Parking Lot Landscape Calculation Plan
    - L2.0 Planting Plan
34. Mullins Certificate completed by Thomas Wrynn, dated/received 10/04/23, 1 page
35. McMahon Traffic Response to Comment Letter, dated/received 10/10/23, 87 pages
36. Revised Plan Set entitled "Proposed Site Plan Warehouse Development" prepared by Advanced Concepts Engineering, dated/received 10/11/23, 11 sheets including:
    - C1.0, Cover Sheet
    - C2.0, Existing Conditions Plan
    - C4.0, Layout and Zoning Plan
    - C5.0, Drainage and Utilities Plan
    - C6.0, Grading Plan
    - C7.0, Construction Notes and Details 1
    - C7.1, Construction Notes and Details 2
    - C7.2, Construction Notes and Details 3
    - C7.3, Construction Notes and Details 4
    - C8.0, Sedimentation & Erosion Control Plan
    - C9.0, Erosion Control Notes and Details
37. Revised Plan Set entitled "Proposed Site Plan Warehouse Development" prepared by Advanced Concepts Engineering, dated/received 10/25/23, 16 sheets including:
    - C1.0, Cover Sheet
    - C2.0, Existing Conditions Plan
    - C7.3, Construction Notes and Details 3
    - C7.4, Construction Notes and Details 4

- C3.0, Locus Plan
- C4.0, Layout and Zoning Plan
- C5.0, Drainage and Utilities Plan
- C6.0, Grading Plan
- C7.0, Construction Notes and Details 1
- C7.1, Construction Notes and Details 2
- C8.0, Sedimentation & Erosion Control Plan
- C9.0, Sediment & Erosion Control - Notes & Details
- L0.0 Notes & Details
- L1.0 Parking Lot Shading Calculation Plan
- L1.1 Parking Lot Landscape Calculation Plan
- L2.0 Planting Plan

38. Public Hearing Continuance Request, dated/received 10/26/23, 1 page
39. Mullins Certificate completed by Everett Skinner, Jr, dated 10/25/23, received 10/30/23, 1 page
40. Mullins Certificate completed by James Lawrence, dated/received 11/01/23, 1 page
41. Requested Waivers Memo prepared by the Attorney for the Applicant, dated/received 11/15/23, 14 pages
42. Public Hearing Continuance Request, dated/received 11/15/23, 1 page
43. Public Hearing Continuance Request, dated/received 11/16/23, 1 page
44. Public Hearing Continuance Request, dated/received 11/29/23, 1 page
45. Public Hearing Continuance Request, dated/received 12/05/23, 1 page
46. Abutter Comments, Cotton, dated 12/30/23, received 01/02/24, 1 page
47. Abutter Comments, Cecere, dated 12/31//23, received 01/02/24, 1 page
48. Abutter Comments, Lee, dated 01/01/24, received 01/02/24, 1 page
49. Access Road Profile Plan prepared by Highpoint Engineering, dated/received 01/10/24, 1 page
50. Public Hearing Continuance Request, dated/received 01/11/24, 1 page\
51. Environmental Partners Water Supply Evaluation, dated 01/11/24, received 01/16/24, 49 pages
52. Site Plan prepared by Highpoint Engineering, entitled "275 Green Street Off-Site Improvements, Wrentham, MA, dated 01/31/24, received 02/01/24, color, 11"x17" & 24"x36", 1 sheet

FINDINGS

At their meeting of February 07, 2024, after due consideration of the Exhibits submitted and the entire record of proceedings introduced and accepted in this matter, the Wrentham Planning Board made the following Findings:

1. That determinations regarding the following Findings are based upon the documents and plans identified in this Decision and the information and Exhibits submitted and presented in association with the Application.
2. That determinations regarding the following Findings are also predicated upon the maintenance of the Site in accordance with this Decision, as well as all applicable Federal, State, and Local regulations, except where modified by this Decision.
3. That under the Wrentham General Code (WGC) Ch 390 Zoning, the following permits are required (Exhibits #1, #3a & #3b):
    a. Special Permit (WGC §390-9) and Site Plan Approval (WGC §390-7) for Use (WGC §390-4.2.F.4); Warehouse and storage facility, other than a facility for storage of so-called junk vehicles and other scrapped materials,
    b. Special Permit for Earth Removal (WGC §390-14 & WGC §275) at 82,496 cubic yards (CY),

c. Special Permit for Impervious Coverage of 39.5% in the Aquifer Protection Overlay District (WGC §390-15.5.c.5).

4. That the Project also requires the issuance of a Stormwater Permit from the Planning Board in accordance with WGC §351, Stormwater Management Bylaw, because the project includes land disturbance activity greater than one acre. The Stormwater Permit is a separate document (Exhibits #8, #16, #20-24, #26, #28 & #29).
5. That the Project has received a Septic Permit dated 12/28/23 from the Wrentham Board of Health for the proposed septic system.
6. That the Project received an ORAD on 12/21/22 from the Conservation Commission. This document is recorded in the Norfolk County Registry of Deeds Book 40986, Page 230 (State) and NCRD Book 40986, Page 234 (Town).
7. The Site is 33.90 acres located in the Commercial-Industrial 2 (C-2) Zoning District and wholly within the Aquifer Protection Overlay (A) District, and a small portion is within the Watershed Protection Overlay (W) District. The Site is further constrained along the rear property line by a 325' wide New England Power Company easement for electric transmission lines. The Site has been associated with the mining, processing, storing, and transporting of earth materials since the 1930's. Consequently, it has been significantly altered from its natural state. Due to the location of the utility easement and wetlands, there are approximately 21 developable acres, and the Applicant is proposing to alter/improve approximately 18 acres of the parcel (Exhibits #1, #3a, #3b, #4, #6, & #8).
8. The Applicant proposes constructing a new 342,735 sf warehouse building with ancillary business offices (the "Project"). The Project will include site improvements such as paved access driveways, parking for 229 passenger vehicles, including seven accessible spaces, 51 trailer truck parking spaces, loading bays, landscaping, and related utilities, including stormwater management facilities as shown on the submitted plans. A total of 39.5% of this property area will be rendered impervious with this proposal (Exhibits #1, #3a, #3b, #4, #6, #8, #21, #30, #33, #36 & #37).
9. That the Site is located on the north side of Green St, west of Route 1A. Green St abuts the site to the south, commercial properties to the east, wooded land, and an electric transmission line easement to the north and west. Access to the Site will be provided by way of two full-movement driveways to Green St. The Project's Traffic Report identified existing poor levels of service (LOS F) at the Route 1A and High Street intersections and the West Street and Green Street intersections. The existing data at this intersection indicates that the volumes would meet the criteria for signalization. With this project, the level of service will still be LOS F, with slight increases in overall volume-to-capacity ratios and delays for the critical movements from the High Street related to the project. The Applicant discussed furthering the Traffic Signal Warrant Analysis work that the Board recently conditioned for 315 Green St (aka 404 Green St) and has committed to submit engineered design plans that would be compatible with the MassDOT's 100% design criteria to be submitted for construction funding through the State's Transportation Improvement Plan (TIP) or other transportation funding source. The Applicant's Traffic Report recommended that to maintain sight distances, a sight distance triangle be established along the sight frontage, in both directions from a point 15 feet back from the site driveways and extend to each of the corners of the site along Green St. Any existing vegetation should be cut back, and any new plantings should be designed to be low growth plantings not to impede sight distances (Exhibits #7, #15, #27 & #35).
10. That a peer review of the traffic issues has been performed on behalf of the Town by McMahon Associates, Exhibit #35; all traffic issues identified by McMahon have been resolved by the Applicant and as conditioned by this Decision.

11. That during the public hearing, the Engineer presented the proposed stormwater management system. The Engineer noted that surface runoff from paved parking areas, access driveways, loading, and truck operating areas is collected, then treated through a combination of appropriately sized hydro-dynamic separators and two sediment forebays, which is then discharged to a retention facility for recharge to the groundwater aquifer. Roof runoff from the approximately 8-acre building will be collected and discharged to the retention facility for recharge to the groundwater aquifer. The system, designed to meet both the MassDEP Stormwater Management Standards and the Wrentham General Bylaw §351 Stormwater Regulations, assures that there is no adverse impact from the development of the impervious surfaces to the groundwater. The Board further directed the Applicant to revise the snow storage area to treat the runoff during melting (Exhibits #4-#6, #8, #16, #20-#24, #26, #28, #29, #33, #36 & #37).
12. That a peer review of the stormwater management system has been performed on behalf of the Town by Beals & Thomas, Inc. (BTI). In accordance with the letter submitted by BTI on 09/26/23 (Exhibit #31) and excepting the few items recommended as conditions of approval, all stormwater issues have been resolved by the Applicant and as conditioned by this Decision.
13. In accordance with WGC §390-18.5, the Project has over 320 feet of contiguous frontage and is allowed two free-standing signs, placed at least 160 feet apart, each not to exceed 40 sf, set 20 feet from any lot line, and at least 6 feet of vertical clearance from the ground to the bottom of the sign. The Project is also allowed one 10sf wall sign. The Board has the authority to vary sign requirements in connection with the granting of any site plan approval upon a finding that the change is not detrimental to the intent of §390-18.1.
14. The Applicant, in consultation with Public Safety and DPW, has proposed several mitigation items to offset the impact of their project on this area. Those items are:
    a. Extend Water Main: The Applicant proposes to install 2,008 LF of 12" ductile iron cement-lined (DICL) water main line in Green Street. The work would start from the current terminus of the previously installed water main near the southern property corner of 275 Green Street and end at the common boundary line between 225 and 85 Green Street. The Board notes that the Applicant also owns additional property on this road and may extend the water line once their permitting begins to create a looped system to West Street. The Board further notes this work builds on improving water quality in this area by incrementally bringing the water main up Green St (Exhibit #37).
    b. Pave WVPO Emergency Access Drive: The Applicant proposes to improve the emergency access to the WVPO by constructing a 22ft wide 1,750LF long bituminous concrete driveway from Green St to the rear of the WVPO building. The driveway will be constructed with a 2" sealed binder coat, and the Board notes that this will reduce the wear and tear on emergency vehicles, decrease emergency response times, and provide an alternative egress for patrons in emergencies. The Board further finds that the approximate cost for the Town to complete this work would be $140,000.
    c. High St & Route 1A Intersection Improvements: The Applicant proposes to work with MassDOT and the Town to advance design plans through to 100% completion to be included on the State's Transportation Improvement Plan (TIP) and/or other State Transportation funding program. The Board notes that the existing intersection operates at a Level of Service (LOS) F, and the increased traffic will only exacerbate that service. Installing a traffic signal at this intersection will greatly improve the traffic flow in this area and the future development along this street.

Criteria for Site Plan Approval [WCG §390-7.7(B)]

15. With regard to WGC §390-7.7(B)(1), based upon the Findings stated within this Decision, there is adequate stormwater retention on the site (Findings #4, #11 & #12).
16. With regard to WGC §390-7.7(B)(2), based upon the Findings stated within this Decision, there is adequate emergency access to the site. The proposed site plan includes access from Green Street, which is a public way. The proposed drive aisles provide adequate access to emergency vehicles on all sides of the building (Exhibits #6, #11, #21, #30, #33, #36 & #37).
17. With regard to WGC §390-7.7(B)(3), that based upon the Findings stated within this Decision, the site is currently a vacant lot and was previously disturbed as part of a pre-existing gravel removal operation. The Board notes that the Site is proposing an ample amount of landscaping and trees to reduce the heat island effect of the parking area and to provide a vegetated screening of the site from the adjacent properties (Exhibits #6, #11, #21, #30, #33, #36 & #37).
18. With regard to WGC §390-7.7(B)(4), the Application minimizes air and water pollution. Mitigation measures will be implemented as necessary to minimize and control the dust that may occur as a result of the proposed grading and construction activities. All demolition activities will be conducted in accordance with the applicable provisions of the Dust, Odor, Construction, and Demolition regulations, 310 CMR 7.09. Upon completion of construction, there will be tractor-trailer trucks associated with site operations on the site with associated truck and car emissions due to engine idling, which will be regulated by the Massachusetts Anti-Idling Law, MGL Chapter 90, Section 16A, as implemented through the Massachusetts Air Pollution Control Regulations, 310 CMR 7.11.
19. With regard to WGC §390-7.7(B)(5), based upon the Findings stated within this Decision, the collection and disposal of solid waste is satisfactory. The proposed facility will have an onsite dumpster set on a concrete pad in the loading bay area. A solid waste contractor will be retained to perform weekly refuse removal services (Exhibits #3a & #37, Finding #5).
20. With regard to WGC §390-7.7(B)(6), based upon the Findings stated within this Decision, pedestrian and vehicular safety on site and with adjoining properties is adequate. On a typical weekday, the proposed development is expected to generate 580 daily vehicle trips. During the weekday morning peak hour, 65 vehicle trips (46 cars / 4 trucks entering and 12 cars / 3 trucks exiting) are expected. During weekday evening peak hours, 68 vehicle trips (14 cars / 5 trucks entering and 44 cars / 5 trucks exiting) are expected. Site circulation and parking has been designed to comply with the requirements of the Zoning Bylaw (Findings #8 & #10).
21. With regard to WGC §390-7.7(B)(7), based upon the Findings stated within this Decision, the Application minimizes the visibility of parking and any outdoor storage from the public view and any glare from headlights through additional plantings. The Site has been designed to distribute parking around two sides of the building to minimize large expanses of pavement. While the site has little existing vegetation, the proposed improvements include substantial landscaping and tree plantings along those property lines that have direct abutters to provide a vegetated screen from parking and reduce visual glare from headlights and facility lighting (Exhibits #31 & #37).
22. With regard to WGC §390-7.7(B)(8), based upon the Findings stated within this Decision, the intrusion of light from stationary fixtures on the site to adjoining properties is adequate (see Finding #21). The proposed lighting layout and fixtures have been designed to minimize the intrusion of light from stationary fixtures on the site into adjoining properties.
23. With regard to WGC §390-7.7(B)(9), based upon the Findings stated within this Decision, the Applicant has requested a waiver from submitting Architectural Plans. The Applicant noted that a copy of the Architectural Plans would be submitted to the Board prior to obtaining a Building Permit (Waiver #2).

Criteria for Special Permit Decisions [WGC §390-9.2(A)(1-11)]

24. With regard to WGC §390-9.2(A)(1), based upon the Findings stated within this Decision, the project complies with WGC §390-4 & §390-6. The project is located within the Commercial Industrial District 2, and the proposed development of a 342,735-sf warehouse is a use allowed by a Special Permit with Site Plan Approval as specified under §390-4.4(F)(4) and is in overall compliance with §390-6 in its entirety. The Board further finds that the proposal has shown that they can meet the requirements of §390-6 but has requested a waiver for the parking lot shading to remove the trees closest to the building due to recommendations from the Fire Department (Exhibits #1, #4, & #37).
25. With regard to WGC §390-9.2(A)(2), based upon the Findings stated within this Decision, there will not be a significant impact nor an adverse environmental effect on vehicular and pedestrian traffic in the neighborhood, the primary or secondary roads, or the intersections serving the project area (Findings #9, #10 & #14d).
26. With regard to WGC §390-9.2(A)(3), based upon the Findings stated within this Decision, there will be adequate provisions to control litter, reduce, separate, recycle, and/or compost solid waste generated at the site (Finding #19).
27. With regard to WGC §390-9.2(A)(4), based upon the Findings stated within this Decision, the project will not significantly impact the quality of surface water, ground, waters, soil, and the environment, including noise, vibration, dust, smoke, fumes, odor, glare or another nuisance or serious hazard to the immediate neighborhood (Findings #11, #12, #15, #18, #19, #21, #22 & #26).
28. With regard to WGC §390-9.2(A)(5), based upon the Findings stated within this Decision, the use will not be a danger to the immediate neighborhood and/or the community or premises through fire, explosion, emission of wastes or runoff or other causes (Finding #28).
29. With regard to WGC §390-9.2(A)(6), based upon the Findings stated within this Decision, the proposed water and subsurface sewage disposal for the site are adequate. The Board further notes that the septic system is reviewed and approved through the Board of Health, and the DPW Water Department inspects the water system. (Findings #5, #11, #12, #14, #26, & #27).
30. With regard to WGC §390-9.2(A)(7), based upon the Findings stated within this Decision, the Application will not have a significant impact on municipal public safety services, including water, sewer, police, fire protection and ambulance services (Findings #5, #14, #16, #19, #24-#29).
31. With regard to WGC §390-9.2(A)(8), the Applicant has requested a waiver from submitting the Architectural Plans (Finding #23).
32. With regard to WGC §390-9.2(A)(9), based upon the Findings stated within this Decision, the project will not adversely impact the character of the neighborhood (Exhibit #3a).
33. With regard to WGC §390-9.2(A)(10), based upon the Findings stated within this Decision, the project will not have an adverse impact on the town, its residents, or surrounding properties (Findings #8-#32).
34. With regard to WGC §390-9.2(A)(11), based upon the Findings stated within this Decision, the proposed use is in harmony with the intent and purpose of the Zoning Bylaw ("ZBL") (see Findings #8-#33).
35. With regard to WGC §390-9.2, based upon the Findings stated within this Decision, the proposed use is not in conflict with the public health, safety and to the health of the Town residents (Finding #8-#34).
36. With regard to WGC §390-9.2, based upon the Findings stated within this Decision, the use does not adversely affect the neighborhood, including the zoning district and all abutting districts (Findings #8-#35).

Criteria for Earth Removal Special Permit (WGC §390-14.6 and WGC §275-4)

37. With regard to WGC §390-14.6(A) and §275-6(D)(2)(a), based upon the Findings stated within this Decision, the earth removal for the project may be accomplished without unreasonable danger to the health, safety and general welfare of the inhabitants of the Town in general nor to that of those in the immediate vicinity.
38. With regard to WGC §390-14.6(B) and §275-6(D)(2)(b), based upon the Findings stated within this Decision, the earth removal for the project will not produce unreasonable noise, dust or other effects observable as detrimental to the normal use of adjacent land.
39. With regard to WGC §14.6(C) and §275-6(D)(2)(c), based upon the Findings stated within this Decision, the earth removal and change in topography for the project will be accomplished without adverse effect to abutting land by reason of surface water drainage, recharge of the water table not to the pumping rate of any nearby Town well site.
40. With regard to WGC §14.6(D) and §275-6(D)(2)(d), based upon the Findings stated within this Decision, the earth removal for the Project will not have a material adverse effect on the health or safety of persons living in the neighborhood or on the use or amenities of adjacent land.

Criteria for Aquifer Protection Overlay District (WGC §390-15.6.d.)

41. With regard to WGC §390-15.6(D)(1), based upon the Findings stated within this Decision, the use in no way during construction will adversely affect the existing or potential quality or quantity of groundwater that is available in the Aquifer Protection Overlay District.
42. With regard to WGC §390-15.6(D)(2), based upon the Findings stated within this Decision, the project will have a minimal disturbance of soils, topography, drainage, vegetation, and other water-related natural characteristics.
43. With regard to WGC §390-15.6(D)(3), based upon the Findings stated within this Decision, the project will be in harmony with the purpose and intent of this By-law and its specified criteria.

WAIVERS

At their meeting on February 07, 2024, after due consideration of the Exhibits submitted and the entire record of proceedings introduced and accepted in this matter, the Wrentham Planning Board (MOTION by Mr. Lawrence, SECOND by Mr. Skinner) voted 7-0 by Roll Call vote: Mr. Cass-Aye, Mr. English-Aye, Mr. Lawrence-Aye, Mr. McKnight-Aye, Mr. Skinner-Aye, Mr. Woodhams-Aye, Mr. Wrynn-Aye to GRANT the Applicant's request for waivers from the following sections of the Wrentham General Code §390 (Zoning) & §275 (Earth Removal), finding that the GRANTING of these waivers is in the best interests of the Town and consistent with the intent and purpose of the Zoning Bylaw & Earth Removal Bylaw:

1. WGC §390-6.4(B)(9)(i) On-site parking requirements/Parking lot shading of 50%:
    - Allow for a parking lot shading percentage of 41%. On the recommendation of the Fire Chief, the Applicant removed the trees against the building walls so as not to impede firefighting operations. The Applicant has agreed to plant those trees originally designated against the west building wall around the stormwater retention basin to create additional screening of the building from the street and the neighboring property (Exhibit #37).
2. WGC §390-7, Site Plan Approval
    - WGC §390-7.3, Site plan form – Plan scale: Allow for the scale of the site plan to be 1'=60' where 1"=40' is required. The Applicant has requested the increase in plan scale so that the Site can be shown on one sheet and not multiple.

- WGC §390-7.4(A)(8): Plan prepared by registered Architect. The Applicant has agreed to submit the required Architectural Plans prior to obtaining a Building Permit.

3. WGC §390-14.7 Earth Removal requirements:
   - WGC §390-14.7(C) & §275-7(B)(3): Fifty-foot (50') buffer strip to the property line. The Board notes that site work is proposed within 50' of the property line and that the Applicant owns one of the adjacent parcels and has no issue with the reduced buffer. The other reduced buffer will be used to build the emergency access driveway to the Outlets and the northwest of the building.
   - WGC §390-14.7(F) & §275-7(B)(6): Earth removal in 4-acre grids. The Board notes that these regulations are not intended to apply to project development and are inconsistent with the requirements for construction and site development.
   - WGC §390-14.7(I) & §275-7(B)(9): Topsoil to spread over the finished grades to a depth of not less than six inches over the disturbed area and seeded and maintained. The Board notes that most of the disturbed areas on the Site will be impervious, and thus, topsoil cannot be spread over those surfaces. The Applicant has agreed to adhere to this requirement on those disturbed areas shown as open space on the Landscape plans (Exhibit #37).
   - WGC §390-14.7(J) & §275-7(B)(10): Planting of tree cover over the entire disturbed area at five to six feet on center. The Applicant has submitted a Landscape Plan prepared by a professional Landscape Architect that shows the final plantings for the Site. This condition is not applicable to development projects (Exhibit #37).
   - WGC §390-14.7(K) & §275-7.B(11): No excavation less than 10' above the annual high-water table. The Board finds that construction of the stormwater basin will be limited to the lowest portion of the site, which lies approximately three feet above the estimated high groundwater elevation. The stormwater basin will be constructed in accordance with the regulations of the Planning Board and is located in a commercial zone. The bottom of the basin will be at least three feet above the estimated high groundwater elevation.

CONDITIONS OF APPROVAL

At their meeting of February 07, 2024, after due consideration of the exhibits submitted and the entire record of proceedings introduced and accepted in this matter, the Wrentham Planning Board voted to **GRANT** the Application for Special Permits and Site Plan Approval with the following conditions:

STANDARD CONDITIONS

1. This Special Permit and Site Plan Approval specifically authorizes the construction of an approximately 342,735 square foot warehouse building with office space and associated site improvements on the Site as shown on the Plans identified as Exhibit #37 of this Decision and as modified by the Conditions of these Special Permits / Site Plan Approval.
2. The work authorized by these Special Permits and Site Plan Approval shall be solely for the purposes noted within Condition #1 of this Decision and shall run with the land and be binding upon the property owners as well as their administrators, successors, and assigns, including future tenants. Any instrument for sale, transfer of rights, or interest in all or any part of the Site shall reference these Special Permits and shall include a notice that the successors are bound to its terms and conditions.
3. The Applicant shall adhere to the Wrentham Zoning By-Laws (WGC §390) and all other applicable provisions of municipal law and regulation, Federal and State statutes, and related regulations promulgated by Federal and State agencies.

4. Any modifications to the use, Site, structure(s), and/or Site improvements as described within and authorized by this Decision and as presented to the Board during the public hearing and in the above-referenced Exhibits shall require, prior to implementing such change, a request in writing, from the Applicant to the Board a determination as to whether the proposed change constitutes a Minor or Major Modification. Insubstantial modifications, such as minor field changes, slight variations in building or site layout, and changes that are de minimus in nature, shall not require additional review and approval of the Board and may be approved by the Wrentham Building Commissioner in consultation with the Planning Director.
5. All maintenance of the Site hereafter shall be in accordance with all applicable Federal, State, and Local regulations.
6. In accordance with Section 9.4 of the ZBL, this Special Permit and Site Plan Approval shall lapse within two (2) years from the date of the expiration of the appeal period if substantial use or construction has not been commenced except in accordance with the law. Any request for an extension of said period of validity shall be considered a Modification of this Special Permit and shall be submitted in writing to the Board prior to expiration for review and approval.
7. Approved site plan is valid for two years pursuant to WGC §390-7.7(E). Failure to comply with the site plan conditions will result in a penalty of $300 a day or the maximum allowed under the MGL c. 40A §7 for each day of continued violation.
8. These Special Permits & Site Plan Approval shall not take effect until the Decision and Plan Cover Sheet have been recorded at the Norfolk County Registry of Deeds (NCRD) within thirty (30) days following the expiration of the appeal period. Proof of recording of the Decision and Plans, including the Deed Book and Page Number or Instrument Number, shall be submitted to the Planning Board office within thirty (30) days of recording.
9. By recording this Special Permit Decision in the NCRD, the Applicant agrees to and accepts the Conditions set forth in this Special Permit & Site Plan Approval decision.
10. Any inability, failure, or refusal by the Applicant to comply with the Conditions of this Decision, when notified of the failure of compliance, shall be grounds for immediate denial of building construction or occupancy permit with respect to this project.
11. This approval shall not be construed as final approval of any on- or off-site improvements or work (such as water, sewer, drainage, or other utility installation) associated with this project and shown on the Plans. All applicable Federal, State, and Local approvals/permits shall be obtained by the Applicant prior to the construction of any portion of the development or off-site improvements that warrant such approval/permits. All applicable requirements of the Wrentham Board of Health, Conservation Commission, Department of Public Works, and all other utilities are hereby incorporated by reference as a requirement of this Decision.

<u>CONDITIONS TO BE MET PRIOR TO THE START OF CONSTRUCTION</u>

12. Prior to the endorsement of the site plan, a final revised plan, with a revised plan set date, incorporating all conditions and changes listed herein, stamped by the appropriate professional engineers and/or land surveyors shall be submitted to the Board. A block for Planning Board endorsement shall be placed on the cover sheet.
13. A pre-construction meeting shall be held with the Planning Board's Consulting Engineer and Planning Director prior to the start of construction. The Board may require the services of a peer-review engineer to inspect portions of the work both during and after construction. The costs for these inspections shall be borne by the Applicant. Based on the results of the pre-construction meeting, a review deposit may be required from the Applicant at that time, but failure to require a deposit at that

time shall not preclude the Board from requiring a deposit at a later date if it deems additional inspections are needed.

14. Prior to the start of any construction activity on the Site, an initial inspection of the delineated limits of work, erosion control, and site stabilization measures shall be performed by agent(s) of both the Planning Board and Conservation Commission in the presence of a representative of the Applicant/Developer, and notice of such inspection forwarded to both Boards. No construction activity shall occur on the Site until the Applicant/Developer receives written authorization from the Planning Board and Conservation Commission regarding the adequacy of the initial erosion control and site stabilization measures. The Planning Board reserves the right to require additional erosion control/site stabilization measures at any time during the construction process should the Planning Board, Conservation Commission, or their agent(s) deem such measures necessary. The Applicant/Developer shall be notified in writing of the necessity for such additional measures and shall complete all such requirements within ten (10) days of receiving said notice or other time as may be agreed upon by both the Planning Board and Conservation Commission.

CONDITIONS TO BE MET DURING CONSTRUCTION

15. The Applicant shall take all necessary measures to minimize dust from rising and blowing across the site and onto roads and adjacent properties. Any sediment or dirt tracked onto public ways shall be swept prior to the end of the construction day.
16. The Applicant shall install construction fencing adequate to ensure public safety.
17. No fuel oil or potentially hazardous or flammable materials shall be stored on-site in excess of that allowed under §390-15.5(B).
18. Hours of construction shall be as follows:
    a. Interior Building Fit Out: Monday – Friday, 7 a.m. to 7:30 p.m.; Saturdays, 8 a.m. to 6:30 p.m.; Sundays - no work allowed
    b. Exterior Building Construction and Site Work: Monday – Friday, 7 a.m. to 6:30 p.m.; Saturdays, 8:00 am – 5:00 pm; Sundays – no exterior work allowed.
    c. Holidays: no work is allowed on the following legal holidays: New Year's Day, Memorial Day, July Fourth, Labor Day, Thanksgiving, and Christmas.
    d. These hours may be altered after consultation with the Building Commissioner, and notification of said change shall be sent to the Planning Board office.
19. All grading and construction shall be in accordance with the approved Plans and the Conditions of this Special Permit, as well as all applicable Federal, State, and Local regulations, and shall be accomplished so as not to discharge any pollutants or siltation into waterways or resource areas from the site and its associated improvements during construction, and after completion.
20. The Planning Board reserves the right to utilize review fees as allowed under M.G.L. Ch. 44 §53G for engineering, legal, and any other professional review services that may be needed to review the project adequately, monitor construction activities and impacts, and review final as-built plans.
21. Prior to the issuance of the Building Permit (BP) or Certificate of Occupancy (CO) for the Project, the Applicant shall satisfy the following requirements of the Wrentham Fire Department:
    a. Before BP: Submit to the Fire Department for review and approval a fire protection/detection plan and sprinkler plan. The plan shall include detailed information of the water distribution system and anticipated water flow data, building sprinkler details, and hydrant locations.
    b. Before CO: The Applicant shall install a fire alarm radio box providing a direct connection to the Fire Department. It should be compatible with the current Fire Department receiving

equipment. The Applicant may choose its own equipment, provided it is approved in advance by the Fire Department and the Applicant provides the receiving equipment and programming software to the Fire Department in an acceptable manner

c. Before CO: A fire department connection shall be installed at a location approved by the fire department if required.
d. Before CO: Bidirectional radio amplifiers shall be installed unless the Department agrees to an alternate method. This will include two Fire Department radio channels and one Police Department channel, as specified by each Department.

22. The Applicant shall be responsible for litter control during and after construction.
23. Prior to obtaining their CO, the installation of the looped water line shall have been inspected and approved by the DPW. The Applicant shall submit documentation showing the final sign-off from the DPW.
24. Unless modified by this Decision, the Site shall be developed, constructed, and maintained in accordance with all applicable Federal, State, and Local regulations, and as shown on the Plans identified as Exhibit #37 of this Decision or as modified by the Conditions of these Special Permits and Site Plan Approval. The Applicant shall secure all required permits and approvals at the appropriate stage of construction, and copies of all pertinent documents regarding said permits and approvals shall be filed with the Planning Board in a timely manner.
25. To offset the impact of the Project on the area, the Applicant shall complete the following mitigations (Findings #14 & #29, Conditions #3 & #11):
    a. Extend Green Street Water Main: The Applicant shall install 2,008 LF of 12" ductile iron cement-lined (DICL) water main line in Green Street as shown on Exhibit #52. The Applicant has stated that further extension of the water line may be possible with future permitting of additional land they control in the area. If a request for occupancy of 275 Green Street is requested prior to the water main line extension being completed, the Applicant shall be required to submit a payment equal to the amount that it would cost the Town to complete the waterline extension with funds to be held by the Town and returned to the Applicant at such time as the Applicant completes the agreed work as shown.
    b. Pave WVPO Emergency Access Drive: The Applicant shall improve the emergency access driveway to the WVPO by grading and paving the full 1,750 LF of this 22-foot-wide driveway with 2" sealed binder coat from Green St to the rear of the WVPO building.
    c. High St & Route 1A Intersection Improvements: The Applicant proposes to work with MassDOT and the Town to advance design plans through to 100% completion to be included on the State's Transportation Improvement Plan (TIP) or other State Transportation funding program (see Condition #59).
    d. If, despite all commercially reasonable efforts and for reasons beyond its control, the Applicant is unable to complete the mitigation described above, the Applicant shall fund an account to be identified by the Board with an amount equal to the value of the incomplete work, for use at the Board's sole discretion, for other Town projects and Planning Board priorities.

<u>EARTH REMOVAL CONDITIONS</u>

26. All trees are to be cut, not bulldozed. All trees and brush are to be chipped on site unless removed for commercial purposes. The Applicant shall dispose of any wood wastes in accordance with DEP Wood Waste Policy and the Massachusetts Solid Waste Regulations for the disposal of less than and greater than 200 CY.

27. All loam and topsoil shall be stockpiled on the property, and as operations proceed, areas brought to grade that will remain as open space or landscaping shall be covered with at least six inches of topsoil and/or loam and seeded with a perennial cover crop. Such area shall be reseeded as necessary to assure uniform growth and soil surface stabilization. No topsoil/loam shall be removed from the Site.
28. All existing rules and regulations governing the Earth Removal shall be observed.
29. No earthwork operation shall be conducted, maintained, and/or left in a condition so as to alter the natural drainage flow beyond the property or cause dust, silt, soil, or other materials to be deposited on adjacent properties, or to cause otherwise nuisances, hazards or other objectionable conditions detrimental to health, safety or property values in adjacent areas.
30. Any earth material removed from the site shall be removed only during permitted construction hours. All loaded vehicles shall be suitably covered to prevent dust and contents from spilling and blowing from the load. In the event that debris is carried onto any public way in connection with the construction or operation of the Project, the Applicant shall be responsible for all cleanup of the roadway and any nearby affected public stormwater system. All clean-up shall occur within twenty-four hours after first notification by the Board or its designee. Failure to complete each cleanup may result in the suspension of construction on the site until such infrastructure is clear of debris.
31. Prior to the commencement of any site work, the Applicant shall submit to the Board a final construction phasing schedule, which also identifies the designated route for construction vehicles and their anticipated hours of travel. The installation of hay bales, compost socks, and silt fence, and the clearing and grubbing necessary for such installation, shall not be considered "site work" for purposes of compliance with this condition. The plan shall clearly explain the building construction and utility sequencing and the provisions for safe access during construction. The Applicant shall ensure that, during construction, the design engineer, or its qualified representative, visits the Site regularly and, at a minimum, twice a month during peak activity periods and provides regular reports to the Building Commissioner, Planning Director, and Board's Consulting Engineer to advise of the status of the work, erosion control measures and any special circumstances which may arise in connection with the construction of the project. The applicant shall direct construction vehicles to avoid the potion of Green Street to West Street.
32. Prior to the start of site work, the Applicant shall provide the Planning Board a copy of the Applicant's Federal Clean Water Act National Pollution Discharge Elimination Systems (NPDES) Notice of Intent and permit tracking number with regard to registration for coverage under the 2017 Construction General Permit.

STORMWATER AND SEDIMENT CONTROL CONDITIONS

33. A copy of the final Stormwater Pollution Prevention Plan (SWPPP) required for NPDES approval shall be submitted to the Planning Board or its designee for review and approval prior to the issuance of a building permit. The Board or its designee shall review the SWPPP for compliance with the terms of the NPDES Construction General Permit (CGP), the conditions set forth in the approved plans and these conditions, and the adequacy of the ongoing monitoring and reporting requirements needed for compliance with these conditions. Monitoring maintenance of the stormwater management system is required for the life of the facility and is not terminated when the NPDES Notice of Intent is terminated. If compliance with these items is verified, then approval of the SWPPP shall be granted. Failure of the proposed sediment control system during construction will require additional remediation to be installed to prevent erosion and siltation.
34. The stormwater management system shall be permanently maintained in full working order by the Owner of the property. As required by the Storm Water Pollution Prevention Plan (SWPPP) ongoing

inspection reports shall be submitted to the Town and be kept on site for random inspection as a continuing condition of approval. All components of the system must be properly maintained for the life of the proposed facility.

35. A "Stormwater Declaration of Covenant" from the Owner shall be submitted to the Board, and the owner of the property will maintain the system. The Covenant shall run with the land and be enforceable by the Town of Wrentham. The Covenant shall be in a form to be approved by Town Counsel and the Board and recorded at the NCRD prior to the start of construction.
36. Failure of the proposed sediment control system during construction will require additional remediation to be installed to prevent erosion and siltation.
37. During construction, all construction material, debris, fill, and excavated material shall be stockpiled in areas at the Site designated by the Applicant. Said material shall be stabilized to prevent erosion and to control dust. All excess fill and excavated materials that are not used in conjunction with construction shall be removed from the Site and disposed of in accordance with applicable state laws and regulations. At no time shall any debris or other construction material be buried or disposed of at the Site.
38. The Applicant shall keep the Site clean during construction. Upon completion of all work on the Site and prior to As-Built approval, all debris and construction materials shall be removed and disposed of in accordance with applicable state laws and regulations.
39. All catch basins and drainage structures shall be cleaned at the end of construction and thereafter in accordance with best management practices.

CONDITIONS TO BE MET AFTER CONSTRUCTION

General

40. All final grades and installation of improvements authorized by these Special Permits and Site Plan Approval, or approved modifications thereto, shall be shown on an as-built plan prepared by a professional land surveyor registered in the Commonwealth of Massachusetts. Copies of said plan shall be submitted to the Board and the Building Commissioner prior to the issuance of a Certificate of Occupancy.
41. All landscaping, berms, walls, and fencing shown on the approved plans shall be permanently maintained by the owner, and landscaping shall be replaced as needed to maintain the buffer to neighboring parcels and compliance with the requirements of the zoning bylaws and approved plans.
42. The final as-built plans shall be submitted in electronic format compatible and/or able to be converted for use with the Town's GIS. A copy shall also be submitted in PDF format for more general use.

Noise

43. No vehicles shall be allowed to idle for more than 5 minutes. "No idling" signs shall be placed around the building so as to be clearly visible to all trucks. Idling reduction technologies, including electric parking spaces (anti-idling plugs), shall be installed at all operational loading bays throughout the building.
44. The Applicant and tenant(s) will endeavor to use low-noise backup beepers for tenant-owned vehicles.
45. If rooftop air conditioning units are installed, they shall be screened and sufficiently set back from the building parapet to prevent noise impacts to surrounding areas.
46. Noise levels shall not exceed average ambient levels by more than 10 dB between 7:30 pm and 6:30 am.

47. Building occupants shall conform to Massachusetts DEP noise regulations, 310 CMR 7.10, as amended.
48. No refrigerated storage or refrigerated trucks are allowed unless they meet the noise conditions contained in this decision.
49. The design and location of building mechanicals will consider environmental impacts such as noise and view and will be adequately screened and positioned away from surrounding streets.

Operations

50. Parking lot light shall be turned off or dimmed during the hours the facility is closed for operation unless otherwise deemed necessary by the Wrentham Police Department for safety reasons. All sign illumination shall also be turned off during these hours except for the illumination of signs regarding hours of operation, truck idling, and wayfinding for the purpose of directing truck access and egress in accordance with conditions in this decision. Lighting and illumination levels shall be in compliance with the submitted lighting plans. All fixtures shall have LED bulbs and adjustable shields so as to prevent direct viewing of all lighting bulbs from adjacent parcels and so that none of the lighting extends beyond the property line.
51. The loading bay doors shall be closed when the bays are not in operation (active loading or unloading) to prevent noise transmitting from the building from interior operations.
52. Operation and emptying of trash containers shall be between the hours of 6:00 AM and 10:00 PM.
53. Forklift operations in the truck court area are prohibited from the hours of 10:00 PM to 6:00 AM.
54. Public roadways shall not be used for vehicle staging; all staging of vehicles shall occur on site.
55. Snow storage shall be consistent with the Operations and management plan. No snow shall be deposited in resource areas.
56. Use of drones for shipping and receiving is not allowed unless specifically approved by the Planning Board.
57. There shall be no outdoor storage of materials.

Traffic

58. The Site driveways shall be configured to prevent right-hand turns for trucks exiting the facility towards West Street. Signage shall be posted at all exits, directing trucks to take left-hand turns towards South Street. It shall be the Applicant's responsibility to notify all users of these site restrictions, and the Applicant shall be responsible for any violations. Each instance of a vehicle violating this condition shall constitute a separate violation of this special permit.
59. The Applicant/Owner shall work directly with MassDOT and the Town to further the design and installation of a traffic signal at the intersection of High Street and South Street. If at the time of its request for an Occupancy Permit, the Applicant/Owner has not received MassDOT approval of the traffic improvement design plans to 100% completion, the Applicant/Owner shall provide additional surety in a form acceptable to the Planning Board, in an amount sufficient to secure the value of professional engineering services to no less than 100% completion to ensure the plans continue through the State's review process. If, for some reason, any state permits needed for the plans/intersection cannot be obtained prior to the request for occupancy, the Applicant can request a modification of this permit. During that review, the Board may choose to alter the condition and accept payment in lieu of the work, which will allow plans to be completed at a later date when permits are available.
60. Should post-occupancy traffic monitoring indicate significant impacts to traffic operations requiring mitigation, such as right-of-way adjustments, Applicant will propose mitigation measures.

61. The project's average daily trip generation shall not exceed the trip counts in the Traffic Impact & Access Study dated April 28, 2023, more than 20%. The project's average weekday daily trip generation is as follows: 580 total vehicle trips consisting of 386 passenger car trips and 194 truck trips.
62. If a specific tenant is identified by the Applicant that is anticipated to generate traffic exceeding any of these thresholds under Condition #61 above, the Applicant must apply for an amendment to these Special Permits and produce a new traffic impact study using trip generation specific to that tenant to prove no substantial impacts will result and, following review and approval by the Planning Board, to adjust the above-specified threshold limits as appropriate.

DECISION OF THE BOARD

At their meeting of February 07, 2024, after due consideration of the exhibits submitted and the entire record of proceedings introduced and accepted in this matter, the Wrentham Planning Board voted to 7-0 (MOTION by Mr. Lawrence, SECOND by Mr. Skinner) voted 7-0 by Roll Call vote: Mr. Cass – Aye, Mr. English – Aye, Mr. Lawrence – Aye, Mr. McKnight – Aye, Mr. Skinner – Aye, Mr. Woodhams – Aye, Mr. Wrynn – Aye to **APPROVE with CONDITIONS** the following permits associated with the construction and operation of a warehouse facility located at 275 Green Street, Wrentham, MA:

- **Special Permit and Site Plan Approval for Use**, pursuant to WGC §390-4.2(F)(4), §390-9, & §390-7
- **Special Permit for Earth Removal**, pursuant to WGC §390-14 & WGC §275 for removal of 82,496 cubic yards (CY),
- **Special Permit for 39.5% imperviousness in the Aquifer Protection Overlay District**, pursuant to WGC §390-15.5(c)(5)

BY ORDER OF THE BOARD:

Rachel Benson, Director of Planning & Economic Development

02/08/24
Date

cc:
- Applicant
- Building Commissioner
- DPW
- Owner
- Conservation Commission
- Fire Department
- Assessor
- Board of Health

PROPOSED SITE PLAN
WAREHOUSE DEVELOPMENT
275 GREEN STREET
WRENTHAM, MASSACHUSETTS

RECEIVED
10/25/23
Planning
Dept
Exhibit # 37

SUBMITTED FOR SITE PLAN APPROVAL: APRIL 30, 2023
REVISED FOR PEER REVIEW COMMENTS: SEPTEMBER 15, 2023
REVISED FOR PLANNING BOARD HEARING: OCTOBER 25, 2023

PREPARED FOR

SIMEONE ASSOCIATES LP

56 COLPITTS ROAD
WESTON, MASSACHUSETTS

ZONING REFERENCE:	C2 – COMMERCIAL/INDUSTRIAL DISTRICT 2 AQUIFER PROTECTION DISTRICT
ASSESSOR'S REFERENCE:	MAP, BLOCK, PARCEL J–03–2–3
DEED REFERENCE:	DEED BOOK 32401 PAGE 438 RECORDED IN NORFOLK COUNTY REGISTRY OF DEEDS
PLAN REFERENCE:	PLAN NO. 174 OF 1999, BOOK 464 RECORDED IN NORFOLK COUNTY REGISTRY OF DEEDS
PLAN REFERENCE:	PLAN NO. 30 OF 2006, BOOK 556 RECORDED IN NORFOLK COUNTY REGISTRY OF DEEDS
OWNER/APPLICANT:	SIMEONE ASSOCIATES LIMITED PARTNERSHIP 56 COLPITTS ROAD WESTON, MA 02493

PLANNING BOARD APPROVAL REQUIRED BY SPECIAL PERMIT UNDER ZONING BYLAW, ARTICLES 7, 14 & 15

_____

_____

_____

_____

_____

DATE ENDORSED _____

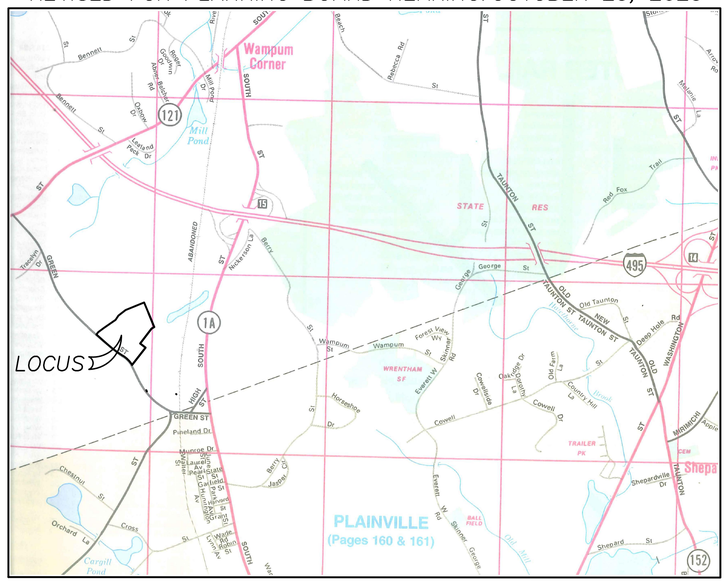

LOCATION MAP

SCALE: 1" = 2000'±

SHEET INDEX

C1.0 COVER SHEET
C2.0 EXISTING CONDITIONS PLAN
C3.0 LOCUS PLAN
C4.0 LAYOUT AND ZONING PLAN
C5.0 DRAINAGE AND UTILITIES PLAN
C6.0 GRADING PLAN
C7.0 CONSTRUCTION NOTES AND DETAILS 1
C7.1 CONSTRUCTION NOTES AND DETAILS 2
C7.2 CONSTRUCTION NOTES AND DETAILS 3
C7.3 CONSTRUCTION NOTES AND DETAILS 4
C8.0 SEDIMENTATION & EROSION CONTROL PLAN
C9.0 SEDIMENTATION & EROSION CONTROL NOTES & DETAILS
L0.0 NOTES AND DETAILS
L1.0 PARKING LOT SHADING CALCULATION PLAN
L1.1 PARKING LOT LANDSCAPE CALCULATION PLAN
L2.0 PLANTING PLAN

CIVIL ENGINEER

ADVANCED CONCEPTS ENGINEERING
305 Bear Hill Road
Hillsborough, NH 03244
Office: (508) 699–6507
Mobile: (617) 899–1504

COMMONWEALTH OF MASSACHUSETTS
DANA R. CLOW
CIVIL
No. 40998
REGISTERED PROFESSIONAL ENGINEER

LAND SURVEYOR

RISSER ENGINEERING COMPANY
93 GEORGE LEVEN DRIVE, UNIT 3
NORTH ATTLEBORO, MASSACHUSETTS 02760

LANDSCAPE ARCHITECT

RADNER DESIGN ASSOCIATES, INC.
3 ALLIED DRIVE, SUITE 303
DEDHAM, MASSACHUSETTS 02026

FEET & METERS SCALE
1" = 40' (40 0 40 80 120 FEET)
1" = 12.1920m (20 0 20 METERS)

SHEET C1.0

PROJECT NO. 79.06

GENERAL NOTES

1. EXISTING CONDITIONS COMPILED FROM AN ELECTRONIC DRAWING FILE ENTITLED "PLAN OF LAND IN WRENTHAM, MASS." DATED AUGUST 12, 2005 PREPARED BY NORWOOD ENGINEERING CO., INC. CONSULTING ENGINEERS–LAND SURVEYORS, 1410 ROUTE ONE, NORWOOD, MA 02062 REVISED MARCH 2, 2006 : UPDATE TOPOGRAPHY, DRAWING NO. 3736–25 6 SHEETS.

2. THE CONTOURS SHOWN ON THIS PLAN (EXCLUDING THE ROADWAY) ARE REFERENCED TO NGVD 1929 AS INDICATED IN THE BENCHMARK REFERENCE NOTE BELOW. ELEVATIONS WITHIN THE ROADWAY LAYOUT LINES WERE FIELD UPDATED (SEE NOTE 6 BELOW) AND ARE REFERENCED TO NAVD 1988. SIMILARLY, BORDERING VEGETATED WETLANDS AND SOIL TESTING ELEVATIONS AS SHOWN HERE ARE REFERENCED TO NAVD 1988. TO ADJUST SITE CONTOUR LINES TO THE CURRENT NAVD 1988 ELEVATION BASE, ADD 0.75 FEET PER MASSDOT GEODETIC DATA.

3. THE PROPERTY LINES SHOWN ON THIS PLAN TAKEN FROM PLAN BY NORWOOD ENGINEERING CO., INC ENTITLED "PLAN OF LAND IN WRENTHAM, MASS." DATED JUNE 6, 2006, RECORDED AT THE NORFOLK COUNTY REGISTRY OF DEEDS AT BOOK 556, PAGE 30 AS PLAN NO. 30 OF 2006.

4. WETLAND BOUNDARIES DELINEATED BY JOHN P. ROCKWOOD, PH.D., SPWS OF ECOTEC, INC. ON SEPTEMBER 27 AND 28, 2022. RESOURCE AREA FLAGS LOCATED BY RISSER ENGINEERING CO. BETWEEN SEPTEMBER 29 AND OCTOBER 3, 2022.

5. ORDER OF RESOURCE AREA DELINEATION ISSUED BY THE WRENTHAM CONSERVATION COMMISSION DATED DECEMBER 21, 2022 ON FILE AT THE NORFOLK COUNTY REGISTRY OF DEEDS AT BOOK 40986 PAGE 230.

6. EXISTING CONDITIONS AND TOPOGRAPHIC DETAIL ALONG GREEN STREET FOR THE LENGTH OF ROADWAY SHOWN HEREIN WAS UPDATED BY SURVEY PERFORMED BY RISSER ENGINEERING CO. 93 GEORGE LEVEN DRIVE, UNIT 3, NORTH ATTLEBORO, MA 02760 BETWEEN SEPTEMBER 29 AND OCTOBER 3, 2022.

ZONING REFERENCE:	*C2 – COMMERCIAL/INDUSTRIAL DISTRICT 2* *AQUIFER PROTECTION DISTRICT*
ASSESSOR'S REFERENCE:	*MAP, BLOCK, PARCEL J–03–2–3*
DEED REFERENCE:	*DEED BOOK 32401 PAGE 438 RECORDED IN NORFOLK COUNTY REGISTRY OF DEEDS*
PLAN REFERENCE:	*PLAN NO. 174 OF 1999, BOOK 464 RECORDED IN NORFOLK COUNTY REGISTRY OF DEEDS*
PLAN REFERENCE:	*PLAN NO. 30 OF 2006, BOOK 556 RECORDED IN NORFOLK COUNTY REGISTRY OF DEEDS*
OWNER/APPLICANT:	*SIMEONE ASSOCIATES LIMITED PARTNERSHIP* *56 COLPITTS ROAD* *WESTON, MA 02493*

LEGEND

SB/dh	STONE BOUND W/DRILL HOLE
TP–3 1/17	TEST HOLE W/ 2023 TEST DATE
°B–28	WETLAND FLAG (2022)
UP	UTILITY POLE
OHW	OVERHEAD WIRE
EHH	ELECTRIC HAND HOLE
EOP	EDGE OF PAVEMENT
(FND)	FOUND

PLANNING BOARD APPROVAL REQUIRED BY SPECIAL PERMIT UNDER ZONING BYLAW, ARTICLES 7, 14 & 15	
SIGNATURE	*DATE*

PREPARED FOR

SIMEONE ASSOCIATES LP
56 COLPITTS ROAD
WESTON, MA

ADVANCED CONCEPTS
ENGINEERING
305 Bear Hill Road Office: (508) 699–6507
Hillsborough, NH 03244 Mobile: (617) 899–1504

REVISIONS	
PER PEER REVIEW COMMENTS	*9/15/2023*
PLANNING BOARD HEARING	*9/27/2023*
PLANNING BOARD HEARING	*10/11/2023*
PLANNING BOARD HEARING	*10/25/2023*

PROJ. NO.	*79.06*
SCALE	*1"=80'*
DRAWN BY	*DRC*
DESIGNED BY	*DRC*
CHECKED BY	
APPROVED BY	*DRC*
DATE:	*4/30/2023*

EXISTING CONDITION PLAN

WAREHOUSE DEVELOPMENT
GREEN STREET, WRENTHAM. MA

C2.0

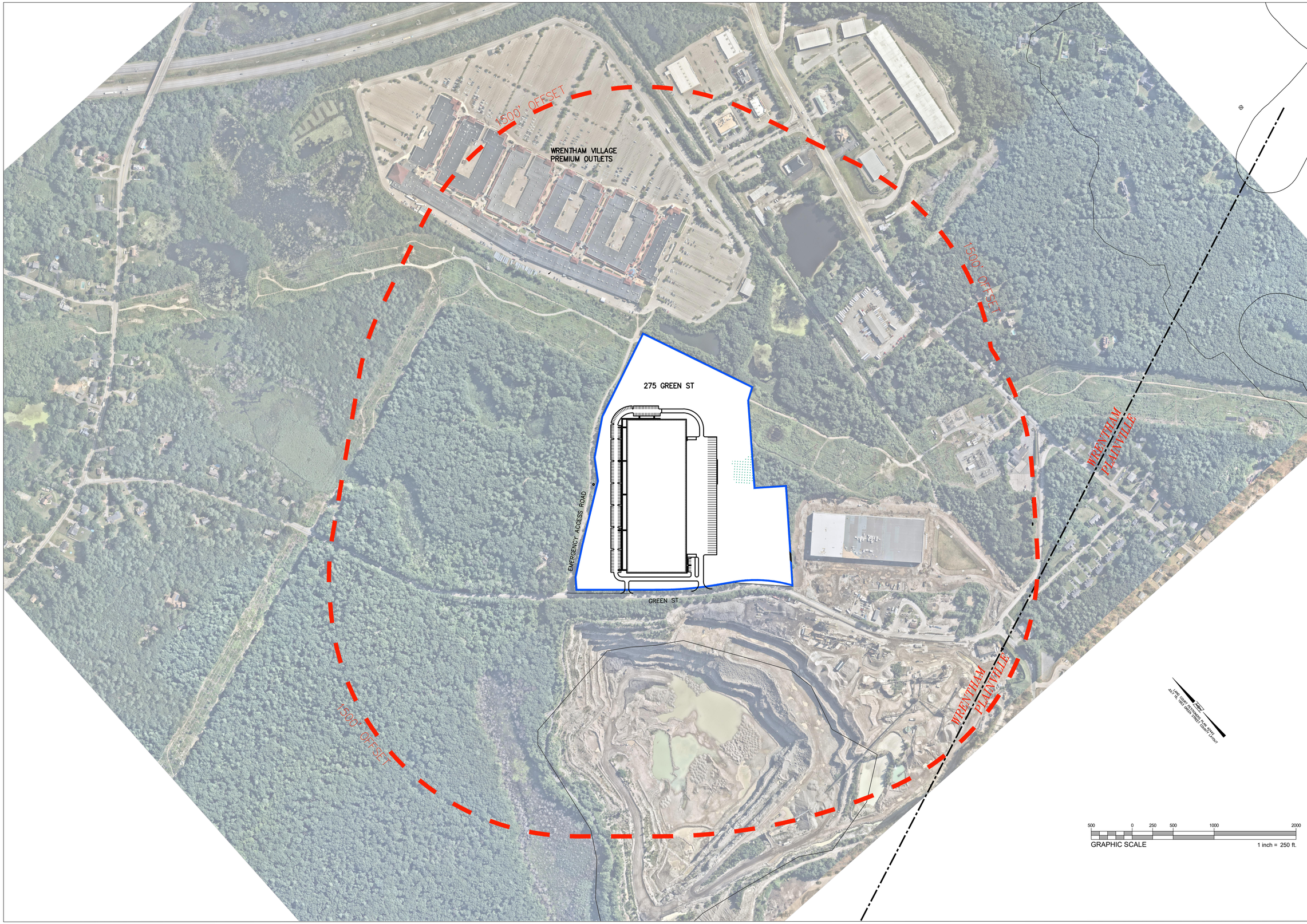

PREPARED FOR

SIMEONE ASSOCIATES LP
56 COLPITTS ROAD
WESTON, MA

ADVANCED CONCEPTS
ENGINEERING
305 Bear Hill Road Office: (508) 699-6507
Hillsborough, NH 03244 Mobile: (617) 899-1504

REVISIONS	
PER PEER REVIEW COMMENTS	9/15/2023
PLANNING BOARD HEARING	9/27/2023
PLANNING BOARD HEARING	10/11/2023
PLANNING BOARD HEARING	10/25/2023

PROJ. NO.	79.06
SCALE	1"=80'
DRAWN BY	DRC
DESIGNED BY	DRC
CHECKED BY	
APPROVED BY	DRC
DATE:	4/30/2023

COMMONWEALTH OF MASSACHUSETTS
DAVID R. CLOW
No. 49568
REGISTERED PROFESSIONAL ENGINEER

LOCUS PLAN

WAREHOUSE DEVELOPMENT
GREEN STREET, WRENTHAM. MA

C3.0

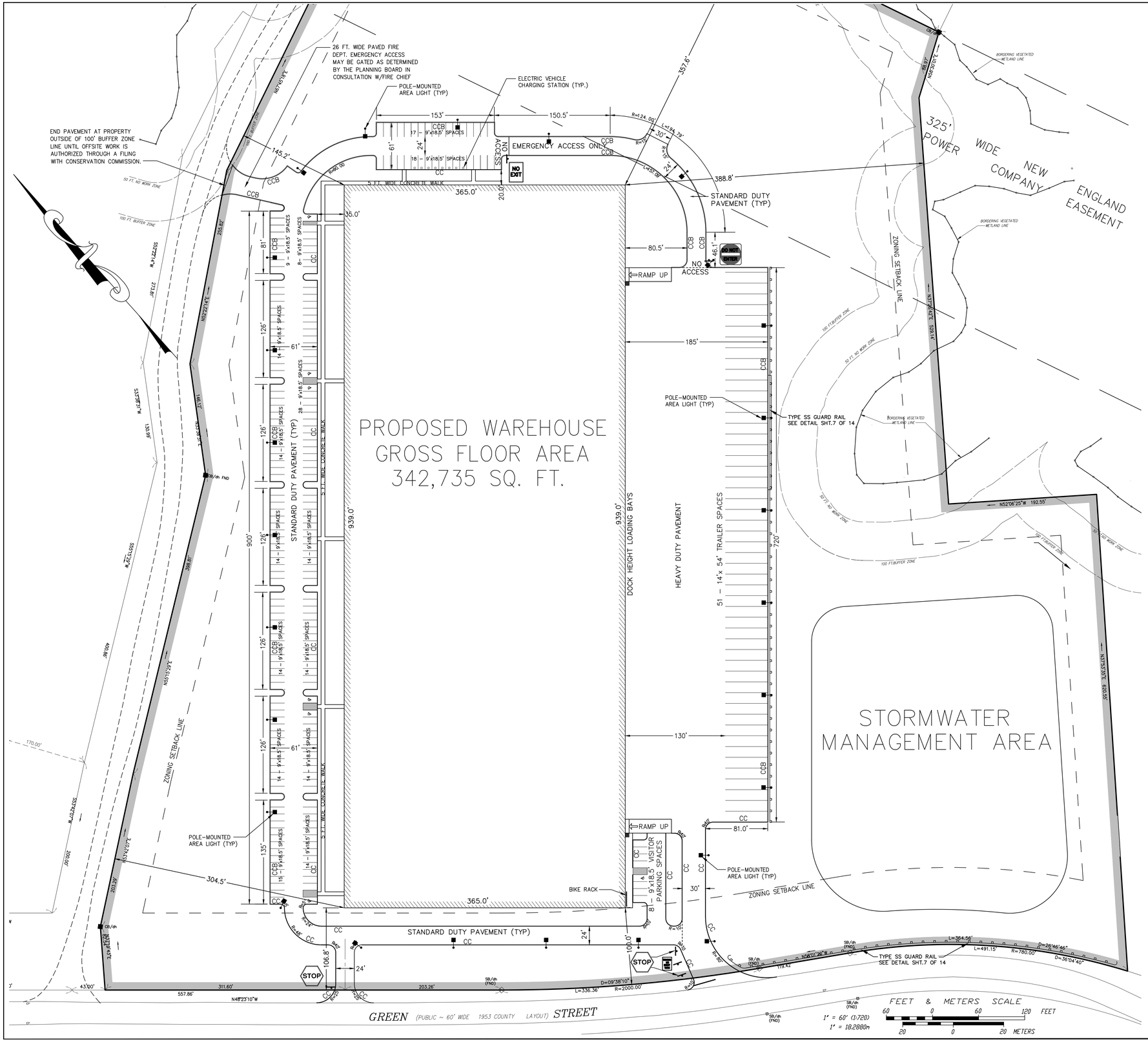

ZONING ANALYSIS

TOWN OF WRENTHAM INTENSITY OF USE REGULATIONS	REQUIRED OR ALLOWED	PROVIDED
ZONING DISTRICT	COMMERCIAL – INDUSTRIAL DISTRICT 2 (C2)	
PRINCIPAL USE	WAREHOUSE	WAREHOUSE
LOT AREA	80,000 SF	1,476,673 SF (33.9 AC)
DEVELOPABLE AREA	N/A	
IMPERVIOUS SURFACES TOTAL	<25.425 AC	13.394 AC
IMPERVIOUS TO TOTAL AREA	N/A	39.51%
CONTINUOUS LOT FRONTAGE	200 FT.	1,335.20 FT.
MINIMUM YARDS		
FRONT	100 FT.	100.0 FT.
SIDE	50 FT.	145.2 FT.
REAR	50 FT.	357.6 FT.
MIN. OPEN SPACE	25%	60.49%
MAX. HEIGHT (FT.)	60 FT.	<60 FT.
MAX. BUILDING COVERAGE	50%	23.2%
EMPLOYEE PARKING WAREHOUSE	1 SPACE/1,500 SF GFA 228 SPACES REQUIRED	229 SPACES PROVIDED INCLUDING 7 HANDICAP ACCESSIBLE SPACES (7 SPACES REQUIRED)
TRAILER PARKING (14'X54')	N/A	51 SPACES

LEGEND

252	CONTOUR
252.35x	SPOT ELEVATION
RAMP UP	ACCESS RAMP
	GUARD RAIL
DMH-21	DRAIN MANHOLE
	PARKING AREA LIGHT
CB-2	CATCH BASIN INLET
	HYDRANT WITH GATE VALVE
	WOODEN SCREEN FENCE
	LANDSCAPE TREES
	LANDCAPE SHRUB/BUSH
CC	CEMENT CONCRETE CURB
CCB	CAPE COD BERM
BCC	BITUMINOUS CONCRETE CURB
EMH	ELECTRIC MANHOLE
FES	FLARED END SECTION
RCP	REINFORCED CONCRETE PIPE
FND	FOUND
DICL	DUCTILE IRON CEMENT LINED
SB/DH	STONE BOUND WITH DRILL HOLE
NO EXIT	SIGN R10-11
DO NOT ENTER	SIGN R5-1
STOP	SIGN R1-1
NO RIGHT TURN	SIGN R3-1

NOTE:

ALL PAVEMENT LAYOUT DIMENSIONS ARE GIVEN TO CURB/GUTTER LINE. PAVEMENT BASE MUST EXTEND BEYOND THESE DIMENSIONS WHERE REQUIRED FOR INSTALLATION OF MODIFIED CAPE COD BERM, GUARDRAIL OR FENCING WHERE INDICATED IN THE DRAWINGS.

NOTE:

THESE DRAWINGS HAVE BEEN PREPARED FOR SUBMITTAL TO THE VARIOUS TOWN OF WRENTHAM MUNICIPAL DEPARTMENTS FOR REVIEW AND FOR ISSUE OF PERMIT AUTHORIZATIONS TO PROCEED TO CONSTRUCTION. WHILE GREAT CARE HAS BEEN TAKEN TO PRESENT THIS INFORMATION AS ACCURATELY AND COMPLETELY AS POSSIBLE TO THE INTENDED PURPOSE, IT SHALL NOT BE CONSTRUED TO BE SUFFICIENT ALONE FOR CONSTRUCTION OF THE PROJECT AS PRESENTED AND APPROVED. THESE DRAWINGS SHALL NOT BE CONSIDERED CONSTRUCTION DOCUMENTS AND SHALL NOT BE USED FOR THAT PURPOSE WITHOUT THE EXPRESSED WRITTEN CONSENT OF ADVANCED CONCEPTS ENGINEERING AND/OR THE ENGINEER OF RECORD. SUPPLEMENTAL DETAILED CONSTRUCTION DRAWINGS AND SPECIFICATIONS WILL BE REQUIRED IN ORDER TO FULLY AND COMPLETELY IMPLEMENT THE DESIGN INTENT OF THESE DRAWINGS. ADVANCED CONCEPTS ENGINEERING SHALL NOT BE RESPONSIBLE FOR CONSTRUCTION MEANS, METHODS, TECHNIQUES OR PROCEDURES UTILIZED BY THE CONTRACTOR NOR FOR THE SAFETY OF THE PUBLIC OR OF THE CONTRACTOR'S EMPLOYEES; OR FOR THE FAILURE OF THE CONTRACTOR TO CARRY OUT THE WORK IN ACCORDANCE WITH ACCEPTABLE STANDARDS OF PRACTICE OR IN ACCORDANCE WITH THE CONTRACT DOCUMENTS TO BE PREPARED BY OTHERS. ADVANCED CONCEPTS ENGINEERING'S LIABILITY FOR THIS PLAN IS LIMITED TO THE EXTENT OF ITS FEE LESS THIRD PARTY COSTS.

PLANNING BOARD APPROVAL REQUIRED BY SPECIAL PERMIT UNDER ZONING BYLAW, ARTICLES 7, 14 & 15

SIGNATURE	DATE

PREPARED FOR
SIMEONE ASSOCIATES LP
56 COLPITTS ROAD
WESTON, MA

ADVANCED CONCEPTS ENGINEERING
305 Bear Hill Road Office: (508) 699-6507
Hillsborough, NH 03244 Mobile: (617) 899-1504

REVISIONS

PER PEER REVIEW COMMENTS	9/15/2023
PLANNING BOARD HEARING	9/27/2023
PLANNING BOARD HEARING	10/11/2023
PLANNING BOARD HEARING	10/25/2023

PROJ. NO.	79.06
SCALE	1"=80'
DRAWN BY	DRC
DESIGNED BY	DRC
CHECKED BY	
APPROVED BY	DRC
DATE:	4/30/2023

COMMONWEALTH OF MASSACHUSETTS DANA R. CLOW No. 40998 REGISTERED PROFESSIONAL ENGINEER

LAYOUT AND ZONING PLAN

WAREHOUSE DEVELOPMENT
GREEN STREET, WRENTHAM. MA

C4.0

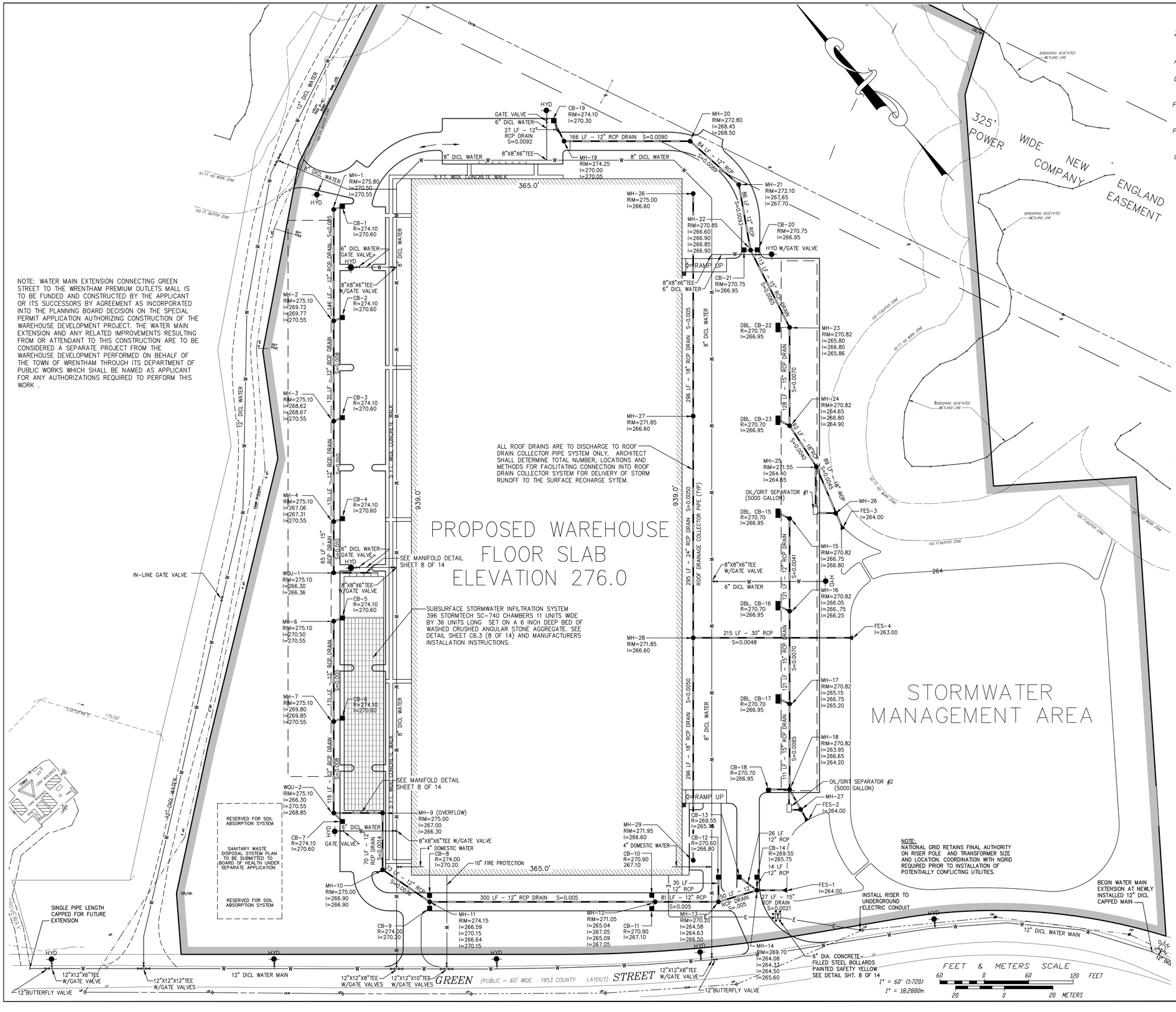

ZONING REFERENCE: C2 – COMMERCIAL/INDUSTRIAL DISTRICT 2
AQUIFER PROTECTION DISTRICT

ASSESSOR'S REFERENCE: MAP, BLOCK, PARCEL J-03-2-3

DEED REFERENCE: DEED BOOK 32401 PAGE 438 RECORDED IN NORFOLK COUNTY REGISTRY OF DEEDS

PLAN REFERENCE: PLAN NO. 174 OF 1999, BOOK 464 RECORDED IN NORFOLK COUNTY REGISTRY OF DEEDS

PLAN REFERENCE: PLAN NO. 30 OF 2006, BOOK 556 RECORDED IN NORFOLK COUNTY REGISTRY OF DEEDS

OWNER/APPLICANT: SIMEONE ASSOCIATES LIMITED PARTNERSHIP
56 COLPITTS ROAD
WESTON, MA 02493

STORMWATER SYSTEM NOTES

CATCH BASIN (CB) INLETS NO'S. 1 THROUGH 7 TO BE STORMCEPTOR 450i WATER QUALITY INLETS. OR AN APPROVED EQUAL.

ALL DRAINAGE STRUCTURES LISTED WITH OUTLET INVERT FIRST, THEN CLOCKWISE.

DOUBLE GRATE CATCH BASIN STRUCTURES TO BE 5 FT. INSIDE DIAMETER.

ANY STORM DRAIN PIPING LOCATED WITHIN THE PUBLIC WAY SHALL BE MINIMUM CLASS III REINFORCED CONCRETE.

OIL/GRIT SEPARATORS (5000 GAL) SIZED FOR 1.5 ACRES OF IMPERVIOUS WATERSHED AND THE 2-YEAR 24 HOUR STORM.

FINAL DESIGN OF THE BYPASS MANHOLES TO BE INCLUDED IN DOCUMENTS ISSUED FOR CONSTRUCTION.

NOTE:

THESE DRAWINGS HAVE BEEN PREPARED FOR SUBMITTAL TO THE VARIOUS TOWN OF WRENTHAM MUNICIPAL DEPARTMENTS FOR REVIEW AND FOR ISSUE OF PERMIT AUTHORIZATIONS TO PROCEED TO CONSTRUCTION. WHILE GREAT CARE HAS BEEN TAKEN TO PRESENT THIS INFORMATION AS ACCURATELY AND COMPLETELY AS POSSIBLE TO THE INTENDED PURPOSE, IT SHALL NOT BE CONSTRUED TO BE SUFFICIENT ALONE FOR CONSTRUCTION OF THE PROJECT AS PRESENTED AND APPROVED. THESE DRAWINGS SHALL NOT BE CONSIDERED CONSTRUCTION DOCUMENTS AND SHALL NOT BE USED FOR THAT PURPOSE WITHOUT THE EXPRESSED WRITTEN CONSENT OF ADVANCED CONCEPTS ENGINEERING AND/OR THE ENGINEER OF RECORD. SUPPLEMENTAL DETAILED CONSTRUCTION DRAWINGS AND SPECIFICATIONS WILL BE REQUIRED IN ORDER TO FULLY AND COMPLETELY IMPLEMENT THE DESIGN INTENT OF THESE DRAWINGS. ADVANCED CONCEPTS ENGINEERING SHALL NOT BE RESPONSIBLE FOR CONSTRUCTION MEANS, METHODS, TECHNIQUES OR PROCEDURES UTILIZED BY THE CONTRACTOR NOR FOR THE SAFETY OF THE PUBLIC OR OF THE CONTRACTOR'S EMPLOYEES; OR FOR THE FAILURE OF THE CONTRACTOR TO CARRY OUT THE WORK IN ACCORDANCE WITH ACCEPTABLE STANDARDS OF PRACTICE OR IN ACCORDANCE WITH THE CONTRACT DOCUMENTS TO BE PREPARED BY OTHERS. ADVANCED CONCEPTS ENGINEERING'S LIABILITY FOR THIS PLAN IS LIMITED TO THE EXTENT OF ITS FEE LESS THIRD PARTY COSTS.

LEGEND

252	CONTOUR
252.35x	SPOT ELEVATION
RAMP UP	ACCESS RAMP
	GUARD RAIL
DMH-21	DRAIN MANHOLE
	PARKING AREA LIGHT
CB-2	CATCH BASIN INLET
	HYDRANT WITH GATE VALVE
	WOODEN SCREEN FENCE
	LANDSCAPE TREES
	LANDCAPE SHRUB/BUSH
CC	CEMENT CONCRETE CURB
CCB	CAPE COD BERM
BCC	BITUMINOUS CONCRETE CURB
EMH	ELECTRIC MANHOLE
FES	FLARED END SECTION
RCP	REINFORCED CONCRETE PIPE
FND	FOUND
DICL	DUCTILE IRON CEMENT LINED
SB/DH	STONE BOUND WITH DRILL HOLE

PLANNING BOARD APPROVAL REQUIRED BY SPECIAL PERMIT UNDER ZONING BYLAW, ARTICLES 7, 14 & 15	
SIGNATURE	DATE

PREPARED FOR
SIMEONE ASSOCIATES LP
56 COLPITTS ROAD
WESTON, MA

ADVANCED CONCEPTS ENGINEERING
305 Bear Hill Road Office: (508) 699-6507
Hillsborough, NH 03244 Mobile: (617) 899-1504

REVISIONS	
PER PEER REVIEW COMMENTS	9/15/2023
PLANNING BOARD HEARING	9/27/2023
PLANNING BOARD HEARING	10/11/2023
PLANNING BOARD HEARING	10/25/2023

PROJ. NO.	79.06
SCALE	1"=80'
DRAWN BY	DRC
DESIGNED BY	DRC
CHECKED BY	
APPROVED BY	DRC
DATE:	4/30/2023

COMMONWEALTH OF MASSACHUSETTS
DANA R. CLOW
No. 40988
REGISTERED PROFESSIONAL ENGINEER

DRAINAGE AND UTILITIES
WAREHOUSE DEVELOPMENT
GREEN STREET, WRENTHAM. MA

C5.0

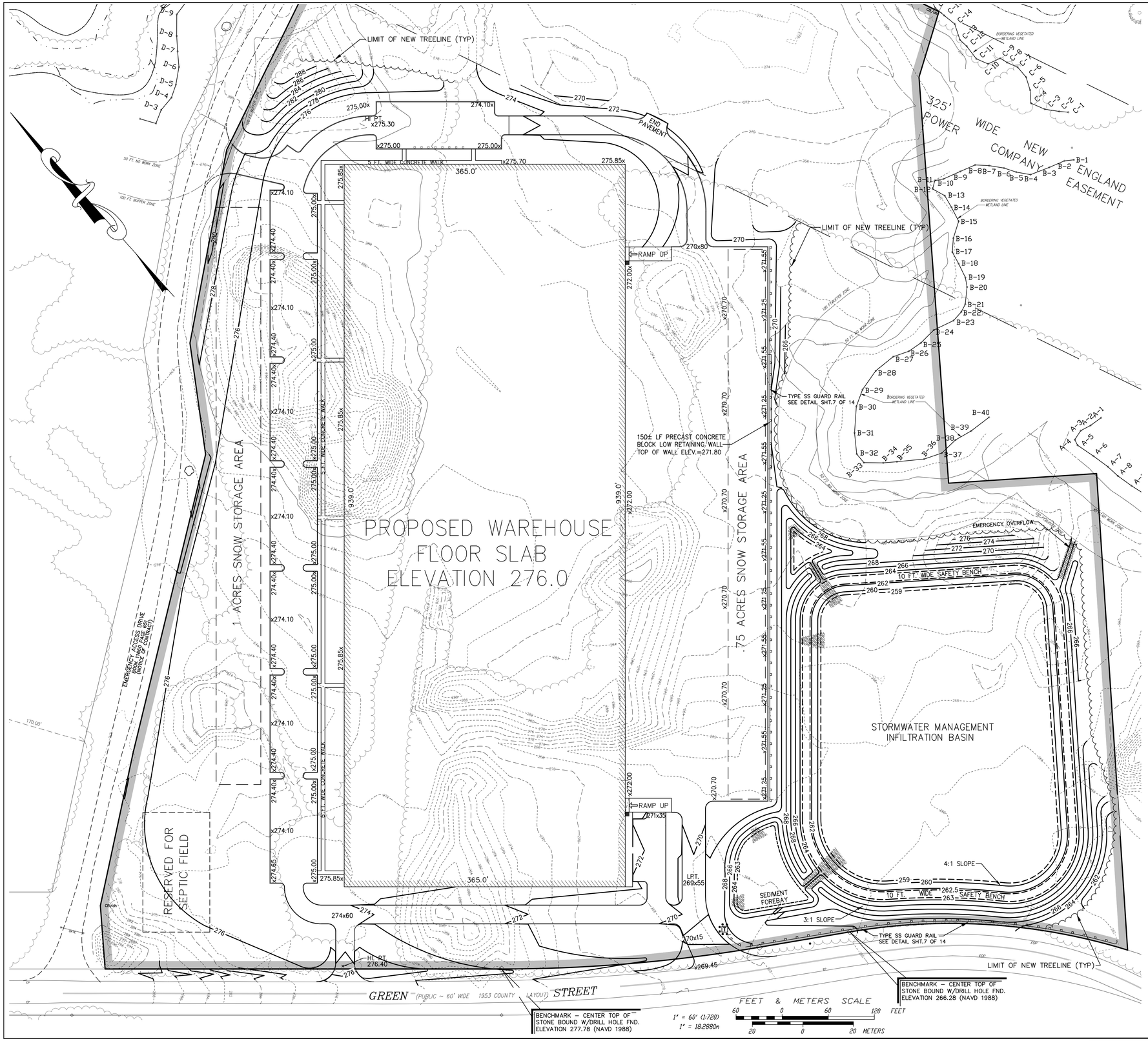

ZONING REFERENCE: C2 – COMMERCIAL/INDUSTRIAL DISTRICT 2
AQUIFER PROTECTION DISTRICT

ASSESSOR'S REFERENCE: MAP, BLOCK, PARCEL J-03-2-3

DEED REFERENCE: DEED BOOK 32401 PAGE 438 RECORDED IN NORFOLK COUNTY REGISTRY OF DEEDS

PLAN REFERENCE: PLAN NO. 174 OF 1999, BOOK 464 RECORDED IN NORFOLK COUNTY REGISTRY OF DEEDS

PLAN REFERENCE: PLAN NO. 30 OF 2006, BOOK 556 RECORDED IN NORFOLK COUNTY REGISTRY OF DEEDS

OWNER/APPLICANT: SIMEONE ASSOCIATES LIMITED PARTNERSHIP
56 COLPITTS ROAD
WESTON, MA 02493

NOTES:

ALL UNSUITABLE SOILS IDENTIFIED WITHIN THE EXCAVATION REPORTS AND/OR IDENTIFIED DURING EXCAVATION OF THE RETENTION AND RECHARGE FACILITIES SHALL BE REMOVED AND REPLACED WITH A SUITABLE NATIVE GRANULAR SOIL MATERIAL SUBJECT TO APPROVAL BY THE SITE ENGINEER.

CLEAN, GRANULAR SOIL MATERIALS EXCAVATED PURSUANT TO CONSTRUCTION OF THE BASIN SHALL BE STOCKPILED SEPARATELY FROM THOSE UNSUITABLE SOILS AND MAY BE UTILIZED AS BACKFILL WHERE UNSUITABLE MATERIALS HAVE BEEN REMOVED IN ORDER TO ACHIEVE PROPER LINES AND GRADES AS DESCRIBED IN THE APPROVED PLANS.

UNSUITABLE SOILS REMOVED FROM THE BASIN EXCAVATION SHALL BE STOCKPILED SEPARATELY FROM OTHER MATERIALS AND SHALL BE REMOVED FROM THE PROJECT SITE UNLESS DEEMED ACCEPTABLE FOR USE IN OTHER NON LOAD-BEARING AREAS OF THE SITE AS DETERMINED BY THE GEOTECHNICAL ENGINEER OR SITE ENGINEER.

THE PRECAST CONCRETE BLOCK RETAINING WALL BEING LESS THAT FOUR FEET IN RETAINED HEIGHT DOES NOT REQUIRE DETAILED DESIGN PREPARED BY A MASSACHUSETTS REGISTERED PROFESSIONAL STRUCTURAL ENGINEER AS SPECIFIED BY THE 2015 INTERNATIONAL BUILDING CODE WITH MASSACHUSETTS AMENDMENTS. SEE CONSTRUCTION NOTES AND DETAILS 2, SHEET 7 OF 14.

THESE DRAWINGS HAVE BEEN PREPARED FOR SUBMITTAL TO THE VARIOUS TOWN OF WRENTHAM MUNICIPAL DEPARTMENTS FOR REVIEW AND FOR ISSUE OF PERMIT AUTHORIZATIONS TO PROCEED TO CONSTRUCTION. WHILE GREAT CARE HAS BEEN TAKEN TO PRESENT THIS INFORMATION AS ACCURATELY AND COMPLETELY AS POSSIBLE TO THE INTENDED PURPOSE, IT SHALL NOT BE CONSTRUED TO BE SUFFICIENT ALONE FOR CONSTRUCTION OF THE PROJECT AS PRESENTED AND APPROVED. THESE DRAWINGS SHALL NOT BE CONSIDERED CONSTRUCTION DOCUMENTS AND SHALL NOT BE USED FOR THAT PURPOSE WITHOUT THE EXPRESSED WRITTEN CONSENT OF ADVANCED CONCEPTS ENGINEERING AND/OR THE ENGINEER OF RECORD. SUPPLEMENTAL DETAILED CONSTRUCTION DRAWINGS AND SPECIFICATIONS WILL BE REQUIRED IN ORDER TO FULLY AND COMPLETELY IMPLEMENT THE DESIGN INTENT OF THESE DRAWINGS. ADVANCED CONCEPTS ENGINEERING SHALL NOT BE RESPONSIBLE FOR CONSTRUCTION MEANS, METHODS, TECHNIQUES OR PROCEDURES UTILIZED BY THE CONTRACTOR NOR FOR THE SAFETY OF THE PUBLIC OR OF THE CONTRACTOR'S EMPLOYEES; OR FOR THE FAILURE OF THE CONTRACTOR TO CARRY OUT THE WORK IN ACCORDANCE WITH ACCEPTABLE STANDARDS OF PRACTICE OR IN ACCORDANCE WITH THE CONTRACT DOCUMENTS TO BE PREPARED BY OTHERS. ADVANCED CONCEPTS ENGINEERING'S LIABILITY FOR THIS PLAN IS LIMITED TO THE EXTENT OF ITS FEE LESS THIRD PARTY COSTS.

SNOW STORAGE WILL BE PROHIBITED WITHIN BUFFER ZONES AND ADJACENT TO THE STORMWATER BASIN.

LEGEND

252	CONTOUR
252.35x	SPOT ELEVATION
RAMP UP	ACCESS RAMP
	GUARD RAIL
DMH-21	DRAIN MANHOLE
	PARKING AREA LIGHT
CB-2	CATCH BASIN INLET
	HYDRANT WITH GATE VALVE
	WOODEN SCREEN FENCE
	LANDSCAPE TREES
	LANDCAPE SHRUB/BUSH
CC	CEMENT CONCRETE CURB
CCB	CAPE COD BERM
BCC	BITUMINOUS CONCRETE CURB
EMH	ELECTRIC MANHOLE
FES	FLARED END SECTION
RCP	REINFORCED CONCRETE PIPE
FND	FOUND
DICL	DUCTILE IRON CEMENT LINED
SB/DH	STONE BOUND WITH DRILL HOLE

PLANNING BOARD APPROVAL REQUIRED BY SPECIAL PERMIT UNDER ZONING BYLAW, ARTICLES 7, 14 & 15	
SIGNATURE	DATE

PREPARED FOR
SIMEONE ASSOCIATES LP
56 COLPITTS ROAD
WESTON, MA

ADVANCED CONCEPTS ENGINEERING
305 Bear Hill Road Office: (508) 699-6507
Hillsborough, NH 03244 Mobile: (617) 899-1504

REVISIONS	
PER PEER REVIEW COMMENTS	9/15/2023
PLANNING BOARD HEARING	9/27/2023
PLANNING BOARD HEARING	10/11/2023
PLANNING BOARD HEARING	10/25/2023

PROJ. NO.	79.06
SCALE	1"=80'
DRAWN BY	DRC
DESIGNED BY	DRC
CHECKED BY	
APPROVED BY	DRC
DATE:	4/30/2023

COMMONWEALTH OF MASSACHUSETTS
DANA R. CLOW
No. 40998
REGISTERED PROFESSIONAL ENGINEER

GRADING PLAN
WAREHOUSE DEVELOPMENT
GREEN STREET, WRENTHAM. MA

C6.0

STC 450i PRECAST CONCRETE STORMCEPTOR CATCH BASIN INLET

NOT TO SCALE

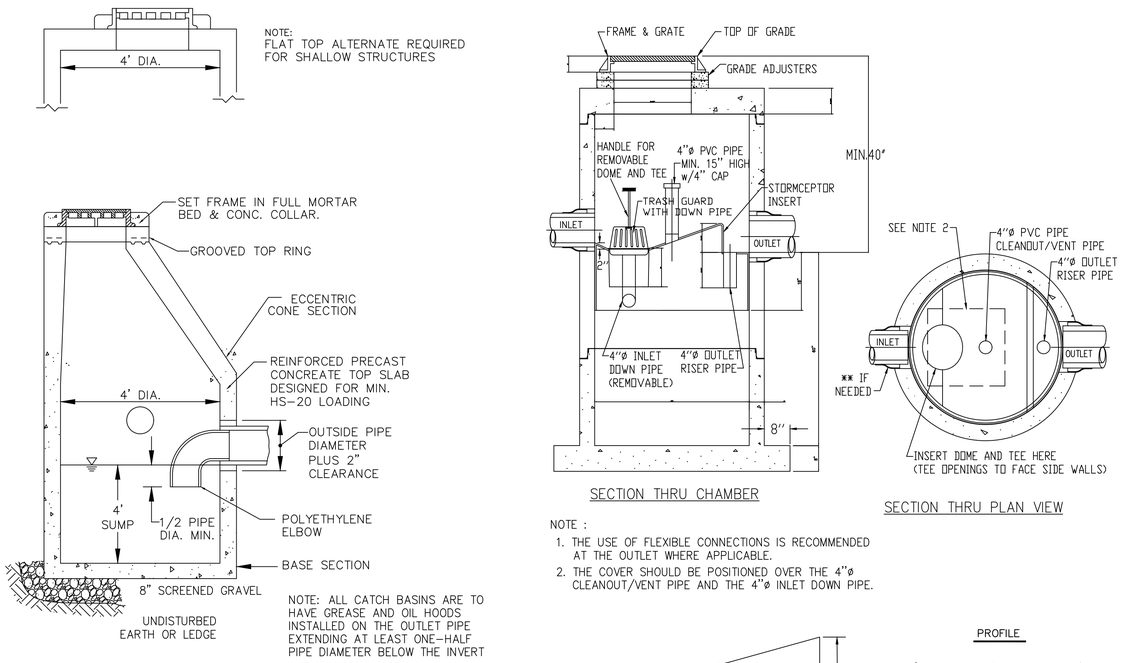

NOTE :

1. THE USE OF FLEXIBLE CONNECTIONS IS RECOMMENDED AT THE OUTLET WHERE APPLICABLE.
2. THE COVER SHOULD BE POSITIONED OVER THE 4"ø CLEANOUT/VENT PIPE AND THE 4"ø INLET DOWN PIPE.

PRECAST CONCRETE CATCH BASIN

NOT TO SCALE

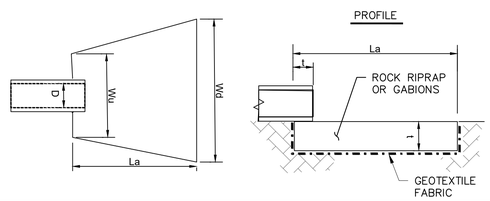

FES RIP-RAP SIZING

FES STRUCTURE	Rock Size (inches)	Apron Legnth La, (feet)	Upstream Width Wu, (feet)	Downstream Width Wd, (feet)	Thickness t, (inches)
1	9	20	6	22	24
2	9	16	4.5	18	24
3	6	12	3	13	18
4	6	12	3	13	18

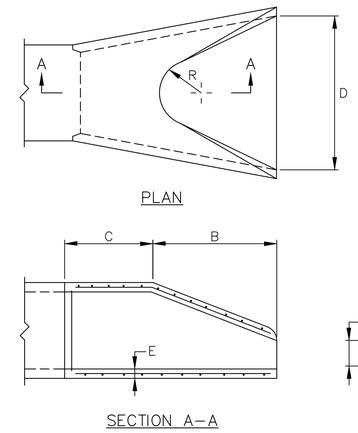

DIA.	A	B	C	D	E	R
12"	4"	2'-0"	4'-0 7/8"	2'-0"	2"	9"
15"	6"	2'-3"	3'-10"	2'-6"	2 1/2"	9"
18"	9"	2'-3"	3'-10"	3'-0"	2 1/2"	12"
30"	12"	4'-6"	1'-7 3/4"	5'-0"	3 1/2"	15"

ALL OPEN-ENDED PIPES OVER 15 INCHES IN DIAMETER SHALL BE PROVIDED WITH A VERTICAL GRATE PROTECTION PERMANENTLY ATTACHED TO THE END OF THE PIPE. THE HORIZONTAL DISTANCE BETWEEN THE VERTICAL BARS OF THE GRATE SHALL BE APPROXIMATELY 6 INCHES. BARS SHALL BE #4 GALVANIZED REINFORCING BARS OR ½ INCH DIAMETER ROUND GALVANIZED OR STAINLESS STEEL BARS.

BARS SHALL BE WELDED TO A ¼" X 1-½" FLATSTOCK FRAME POSITIONED AS SHOWN AND DIMENSIONED FOR EACH SPECIFIC OUTLET IN ACCORDANCE WITH THE TABLE ABOVE. FRAME AND BAR GRATE TO BE SECURED TO EACH CONCRETE FLARED END USING ⅜" REDHED BOLT ANCHORS OR EQUIVALENT FASTENER.

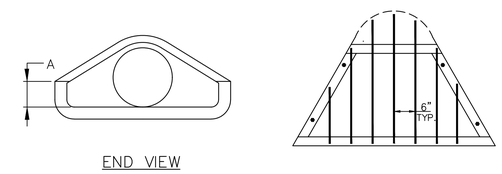

FLARED END SECTION

NOT TO SCALE

PIPE DIAMETER	BLANK ENDS & JUNCTIONS	90° BENDS	45° BEND	22.5° BENDS	11.25° BEND
8"	285 SQ. IN.	400 SQ. IN.	218 SQ. IN.	115 SQ. IN.	60 SQ. IN.
12"	415 SQ. IN.	650 SQ. IN.	320 SQ. IN.	187 SQ. IN.	98 SQ. IN.

NOTES:

1. *REQUIRED BEARING SURFACE (SQ. IN.)*
2. *ALLOWABLE SOIL BEARING PRESSURE FOR SAND & GRAVEL = 1500 LBS. / SQ. FT.*
3. *CONCRETE FOR THRUST BLOCKS SHALL HAVE A MINIMUM COMPRESSIVE STRENGTH OF 2000 PSI AT 28 DAYS.*

THRUST BLOCK DETAILS

NOT TO SCALE

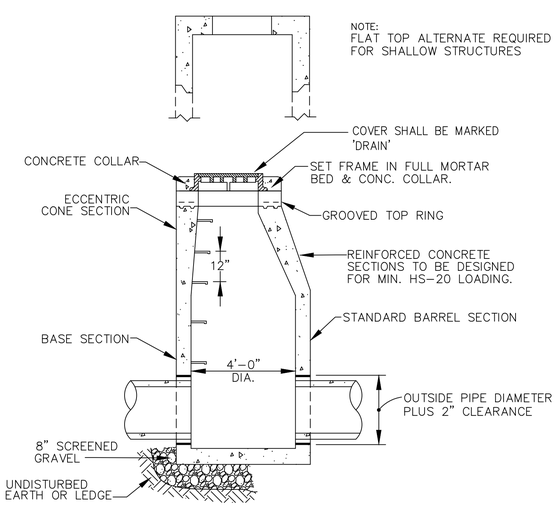

PRECAST CONCRETE DRAIN MANHOLE

NOT TO SCALE

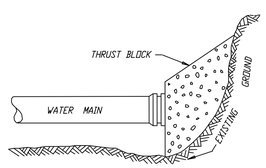

PLUG WITH THRUST BLOCK

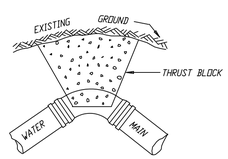

BEND WITH THRUST BLOCK

TYPICAL HYDRANT INSTALLATION

(NOT TO SCALE)

HYDRANTS SHALL COMPLY WITH AWWA SPECIFICATION C502 AND ALL REQUIREMENTS OF THE TOWN OF WRENTHAM STANDARD WATER SYSTEM REQUIREMENTS AVAILABLE FROM THE DEPARTMENT OD PUBLIC WORKS WEBSITE

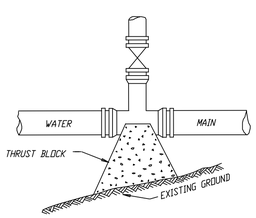

TEE WITH THRUST BLOCK

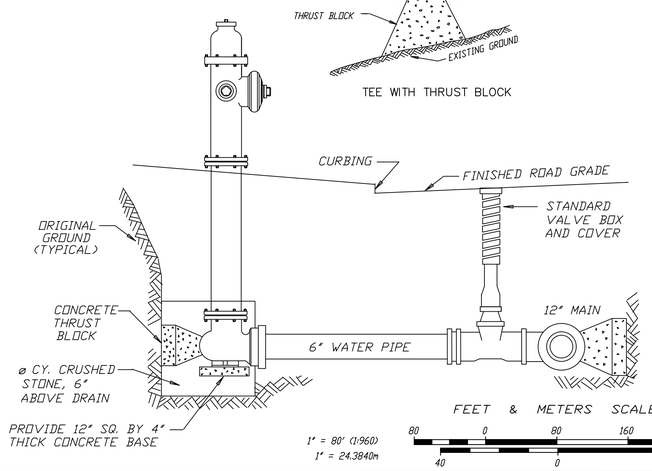

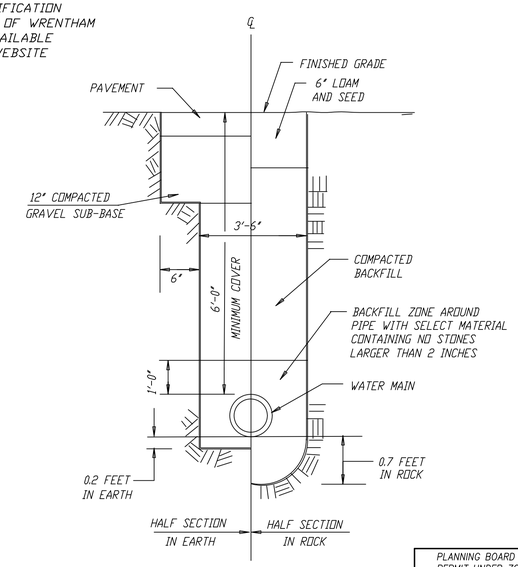

WATER MAIN TRENCH DETAIL

NOT TO SCALE

PLANNING BOARD APPROVAL REQUIRED BY SPECIAL PERMIT UNDER ZONING BYLAW, ARTICLES 7, 14 & 15	
SIGNATURE	DATE

PREPARED FOR

SIMEONE ASSOCIATES LP
56 COLPITTS ROAD
WESTON, MA

ADVANCED CONCEPTS ENGINEERING
305 Bear Hill Road Office: (508) 699-6507
Hillsborough, NH 03244 Mobile: (617) 899-1504

REVISIONS	
PER PEER REVIEW COMMENTS	9/15/2023
PLANNING BOARD HEARING	9/27/2023
PLANNING BOARD HEARING	10/11/2023
PLANNING BOARD HEARING	10/25/2023

PROJ. NO.	79.06
SCALE	1"=80'
DRAWN BY	DRC
DESIGNED BY	DRC
CHECKED BY	DRC
APPROVED BY	DRC
DATE:	4/30/2023

COMMONWEALTH OF MASSACHUSETTS
DANA R. CLOW
CIVIL
No. 40598
REGISTERED PROFESSIONAL ENGINEER

CONSTRUCTION NOTES & DETAILS 1

WAREHOUSE DEVELOPMENT
GREEN STREET, WRENTHAM. MA

C7.0

SHEET 7 OF 16

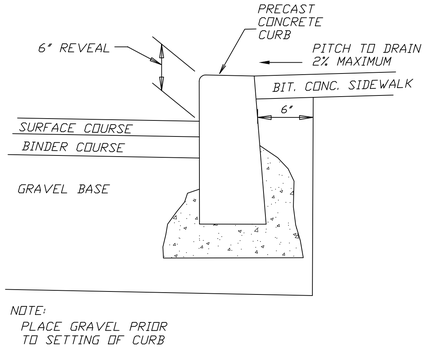

CONCRETE CURB DETAIL

(NOT TO SCALE)

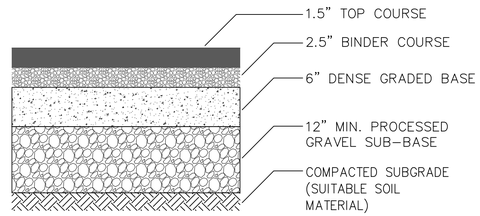

STANDARD BITUMINOUS CONCRETE PAVEMENT SECTION

NOT TO SCALE

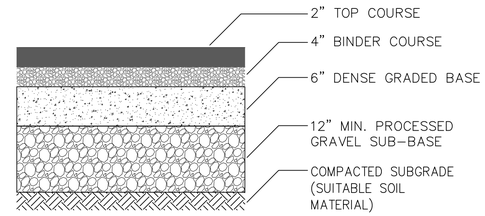

HEAVY DUTY BITUMINOUS CONCRETE PAVEMENT SECTION

NOT TO SCALE

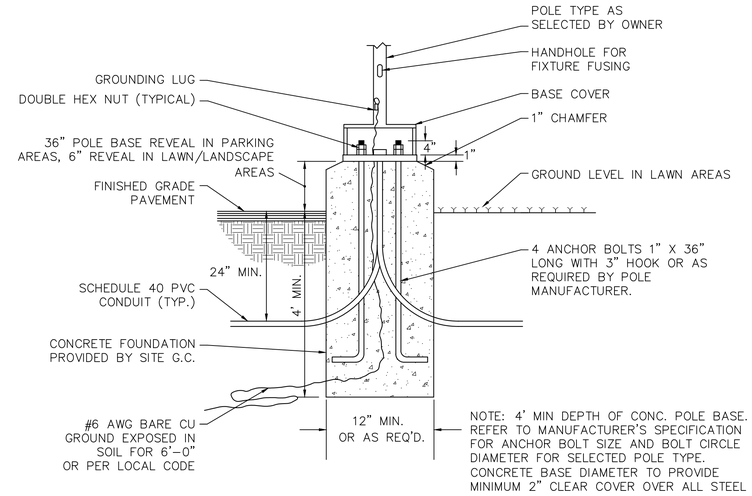

TYPICAL LIGHT POLE BASE DETAIL

NOT TO SCALE

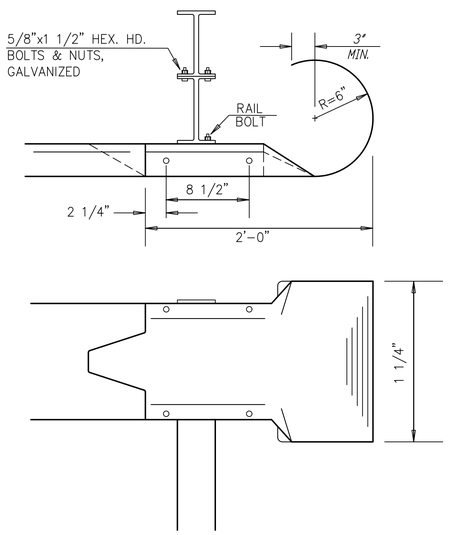

TERMINAL SECTION

(NOT TO SCALE)

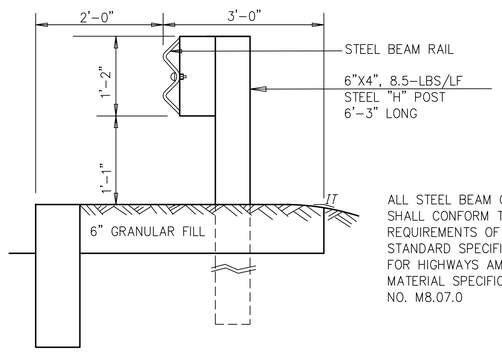

TYPICAL GUARD RAIL TYPE SS

(NOT TO SCALE)

ALL STEEL BEAM GUARD RAIL SHALL CONFORM TO THE REQUIREMENTS OF MDPW STANDARD SPECIFICATIONS FOR HIGHWAYS AMD BRIDGES MATERIAL SPECIFICATION NO. M8.07.0

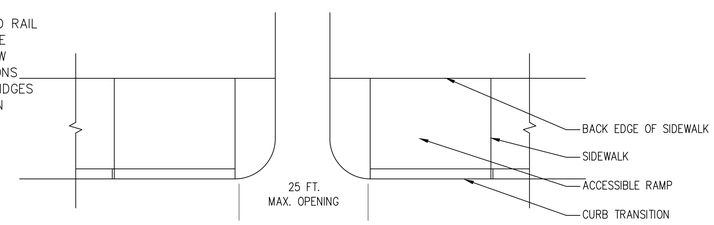

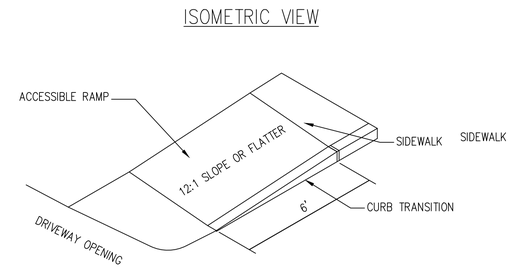

DRIVEWAY OPENING SIDEWALK RAMP

NOT TO SCALE

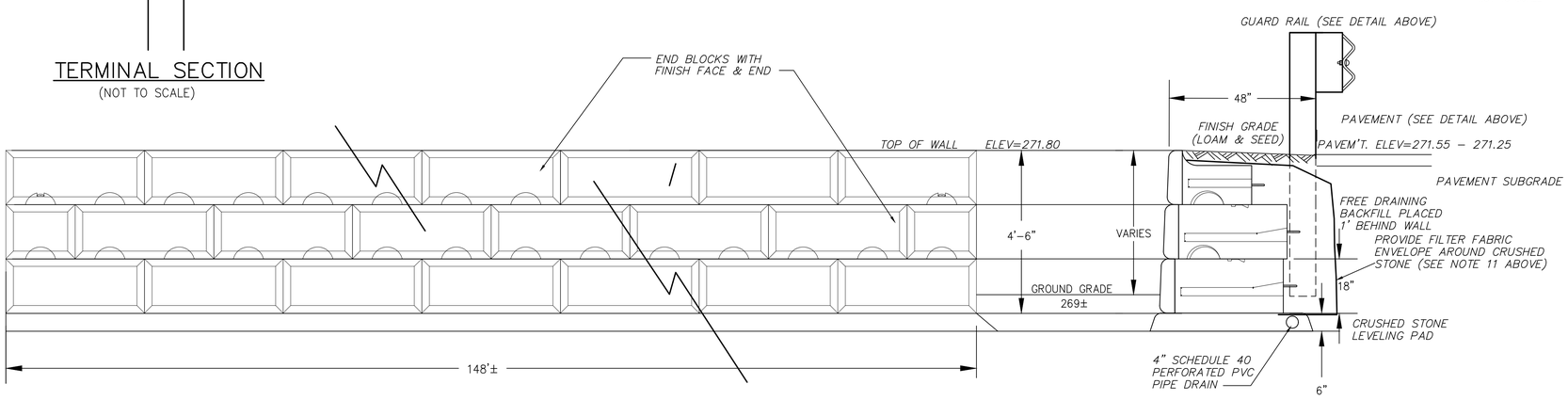

GRAVITY WALL PROFILE

NOT TO SCALE

NOTES:
LARGE BLOCK CONCRETE WALL SYSTEM AS MANUFACTURED BY REDI-ROCK INT'L. 05481 US 31 SOUTH, CHARLEVOIX, MI (866) 222-8400 WWW.REDI-ROCK.COM OR APPROVED EQUAL. CONTACT J&R PRECAST, INC., 16 COUNTY STREET BERKLEY, MA 02779 (508) 822-3311

GRAVITY WALL SECTION

NOT TO SCALE

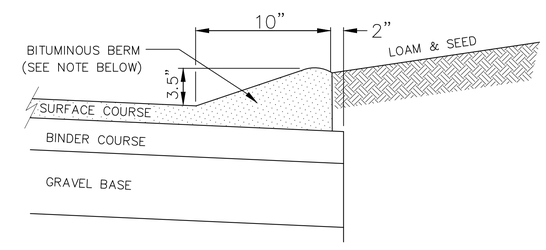

MODIFIED CAPE COD BERM

NOT TO SCALE

NOTE:
ASPHALT SURFACE COURSE AND CAPE COD BERM ARE TO BE LAID IN A CONTINUOUS MONOLITHIC POUR AFTER PLACEMENT OF A TACK COAT OVER BINDER COURSE OF ASPHALT. PLACEMENT OF AN EXTRUDED ASPHALT BERM SEPARATE FROM THE SURFACE COURSE IS NOT ALLOWED UNDER WRENTHAM DEPARTMENT OF PUBLIC WORKS REGULATIONS AND STANDARDS.

FEET & METERS SCALE

1" = 80' (1:960)
1" = 24.3840m

80 0 80 160 240 FEET
40 0 40 METERS

PLANNING BOARD APPROVAL REQUIRED BY SPECIAL PERMIT UNDER ZONING BYLAW, ARTICLES 7, 14 & 15	
SIGNATURE	DATE

PREPARED FOR
SIMEONE ASSOCIATES LP
56 COLPITTS ROAD
WESTON, MA

ADVANCED CONCEPTS ENGINEERING
305 Bear Hill Road Office: (508) 699-6507
Hillsborough, NH 03244 Mobile: (617) 899-1504

REVISIONS	
PER PEER REVIEW COMMENTS	9/15/2023
PLANNING BOARD HEARING	9/27/2023
PLANNING BOARD HEARING	10/11/2023
PLANNING BOARD HEARING	10/25/2023

PROJ. NO.	79.06
SCALE	1"=80'
DRAWN BY	DRC
DESIGNED BY	DRC
CHECKED BY	DRC
APPROVED BY	DRC
DATE:	4/30/2023

COMMONWEALTH OF MASSACHUSETTS DANA R. CLOW No. 40598 REGISTERED PROFESSIONAL ENGINEER

CONSTRUCTION NOTES & DETAILS 2

INDUSTRIAL DEVELOPMENT
GREEN STREET, WRENTHAM. MA

C7.1

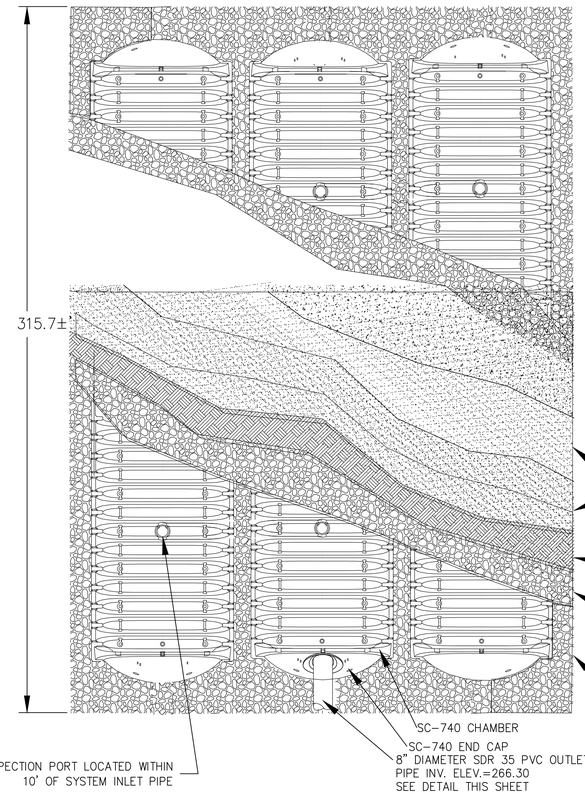

STORMTECH SC-740 CHAMBER SYSTEM
PARTIAL PLAN VIEW

NOT TO SCALE

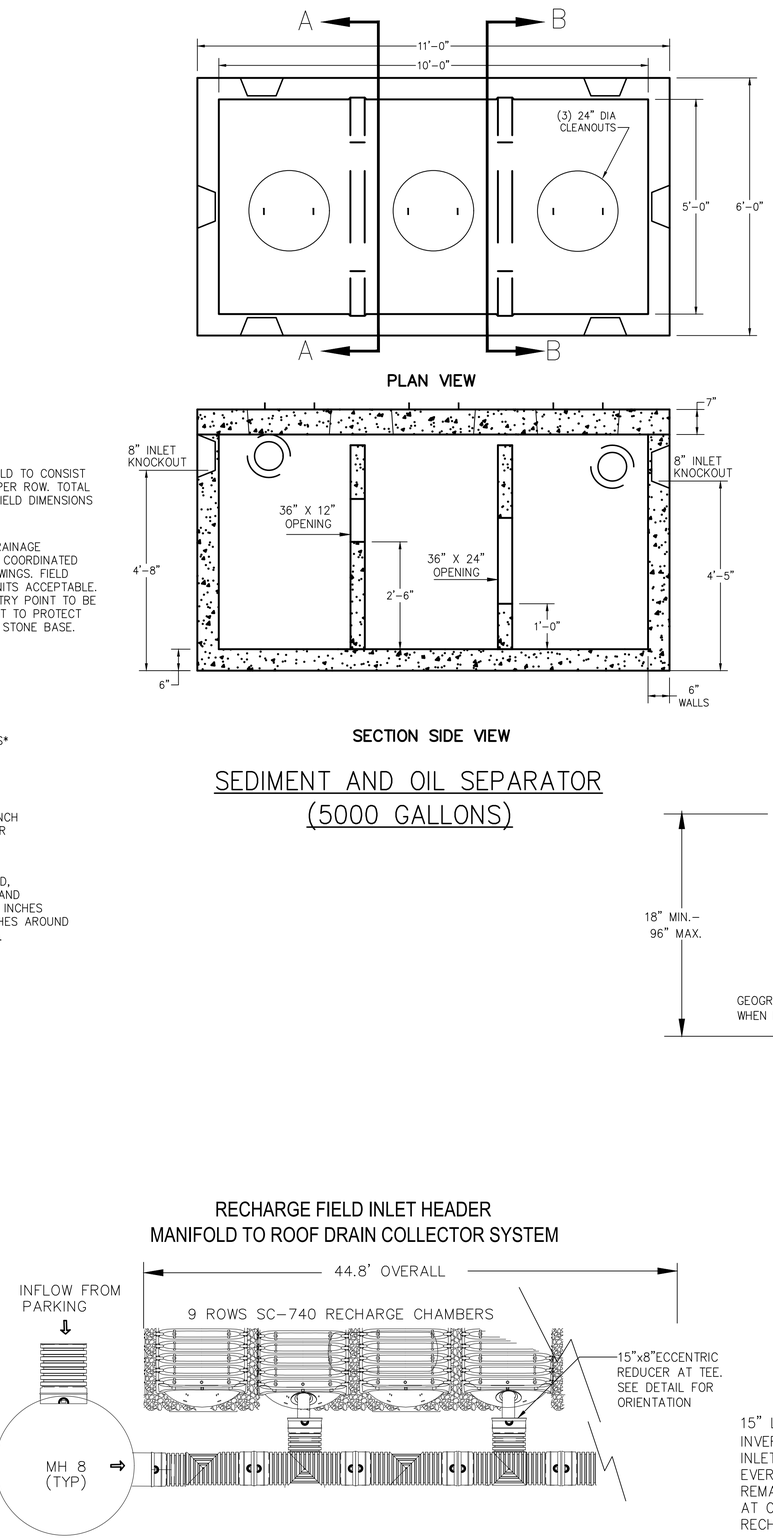

NOTES:
1. CONCRETE: 5,000 PSI MINIMUM AFTER 28 DAYS.
2. DESIGNED FOR H-20 LOADING. ALSO AVAILABLE IN H-10 LOADING WITH 3" WALL.
3. TONGUE & GROOVE JOINT SEALED WITH BUTYL RESIN.

ITEM: TK-M1500CSEP
WEIGHT: 24,400LBS

BAFFLE WALL DETAIL

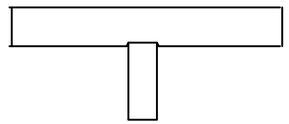

SEDIMENT AND OIL SEPARATOR
(5000 GALLONS)

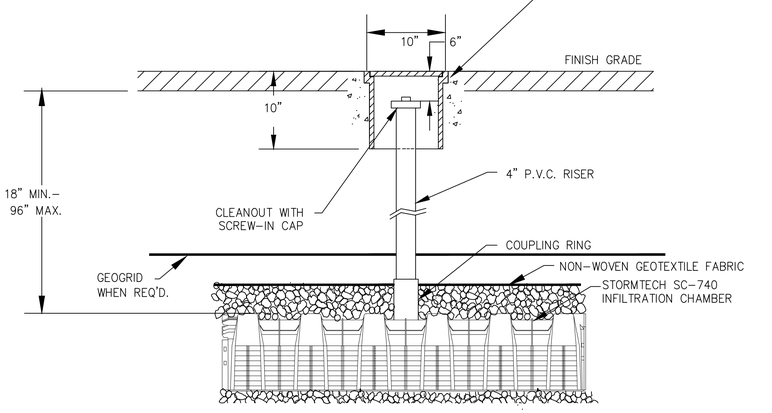

INSPECTION PORT DETAIL

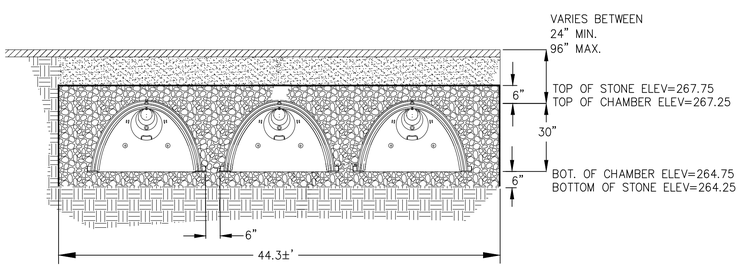

STORMTECH SC-740 CHAMBER SYSTEM
PARTIAL CROSS SECTION

NOT TO SCALE

RECHARGE FIELD INLET HEADER
MANIFOLD TO ROOF DRAIN COLLECTOR SYSTEM

15" LEVEL MANIFOLD PIPE INVERT ELEVATION 266.30 8" INLET PIPE INSTALLED IN EVERY OTHER ROW INLET REMAINING ROWS FROM MH 5 AT OPPOSITE END OF RECHARGE SYSTEM

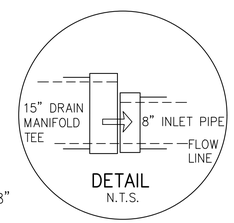

15"x8" ECCENTRIC REDUCER LEVEL MANIFOLD PIPE TEE TO REDUCED INLET PIPE

PLANNING BOARD APPROVAL REQUIRED BY SPECIAL PERMIT UNDER ZONING BYLAW, ARTICLES 7, 14 & 15	
SIGNATURE	DATE

PREPARED FOR
SIMEONE ASSOCIATES LP
56 COLPITTS ROAD
WESTON, MA

ADVANCED CONCEPTS ENGINEERING
305 Bear Hill Road Office: (508) 699-6507
Hillsborough, NH 03244 Mobile: (617) 899-1504

REVISIONS	
PER PEER REVIEW COMMENTS	9/15/2023
PLANNING BOARD HEARING	9/27/2023
PLANNING BOARD HEARING	10/11/2023
PLANNING BOARD HEARING	10/25/2023

PROJ. NO.	79.06
SCALE	1"=80'
DRAWN BY	DRC
DESIGNED BY	DRC
CHECKED BY	DRC
APPROVED BY	DRC
DATE:	4/30/2023

COMMONWEALTH OF MASSACHUSETTS DANIEL R. CLOW No. 40998 REGISTERED PROFESSIONAL ENGINEER

CONSTRUCTION NOTES & DETAILS 3
WAREHOUSE DEVELOPMENT
GREEN STREET, WRENTHAM, MA

C7.2

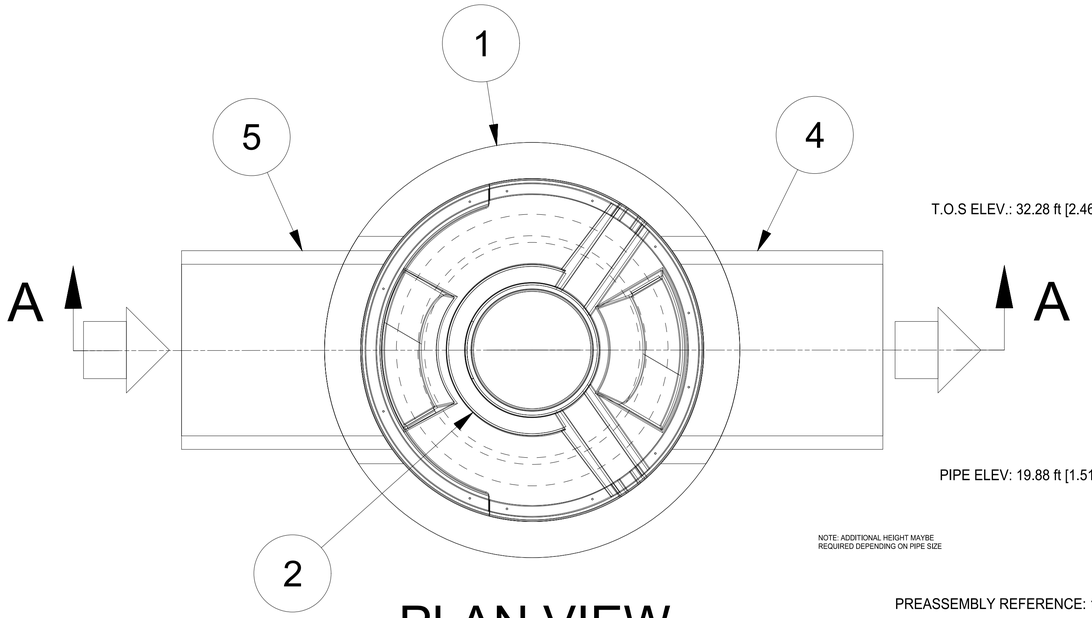

PLAN VIEW

NOTE: ADDITIONAL HEIGHT MAYBE REQUIRED DEPENDING ON PIPE SIZE

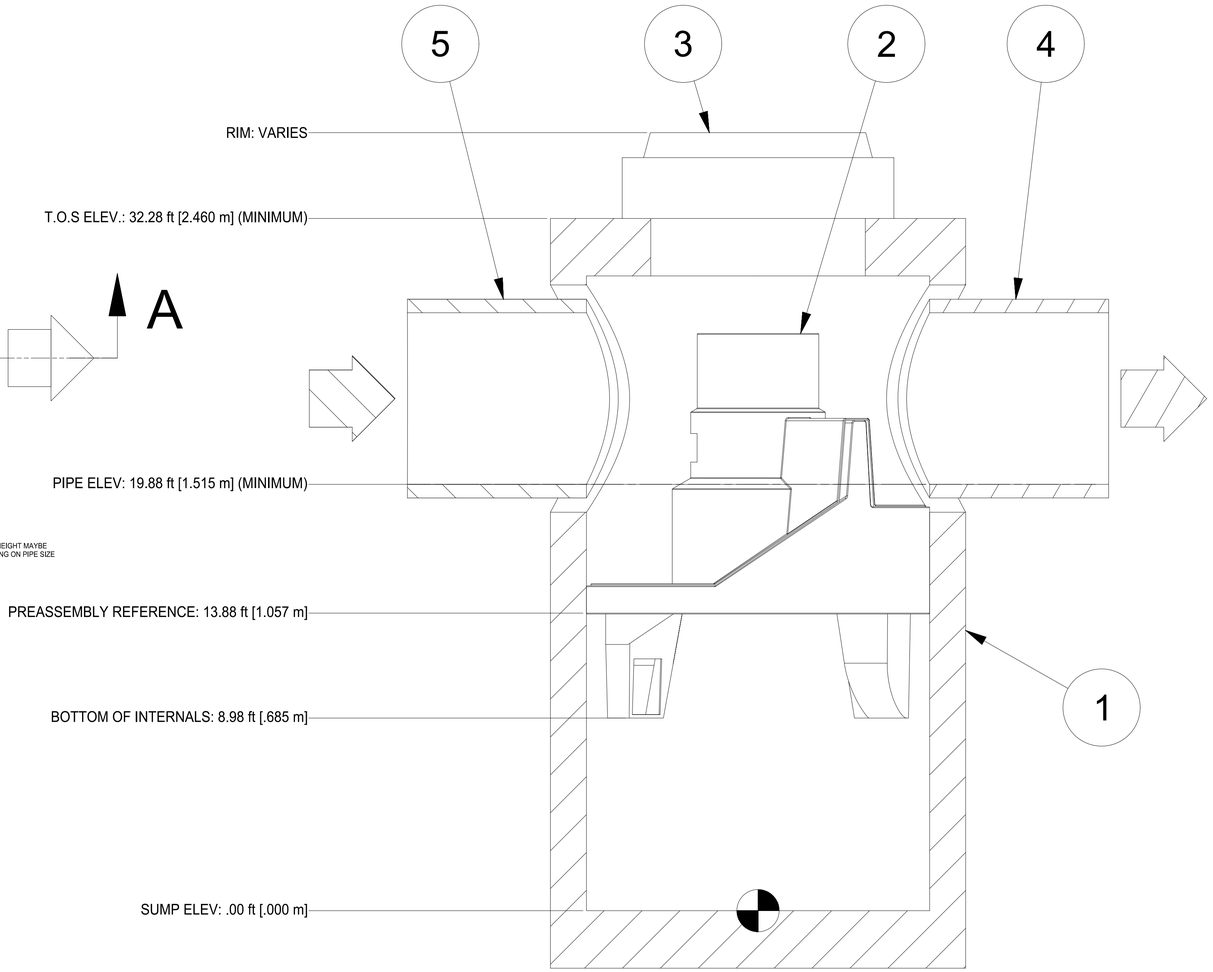

SECTION A-A

HYDRO FRAME AND COVER (INCLUDED)

GRADE RINGS BY OTHERS AS REQUIRED

WATER QUALITY UNIT

NOT TO SCALE

PRODUCT SPECIFICATION:

1. Peak Hydraulic Flow: 18.0 cfs (510 l/s)
2. Min Sediment Storage Capacity: 0.7 cu. yd. (0.5 cu. m.)
3. Oil Storage Capacity: 191 gal. (723 liters)
4. Maximum Inlet/Outlet Pipe Diameters: 24 in. (600 mm)
5. The Treatment System Shall Use An Induced Vortex To Separate Pollutants From Stormwater Runoff.
6. For More Product Information Including Regulatory Acceptances, Please Visit https://hydro-int.com/en/products/first-defense

GENERAL NOTES:

1. General Arrangement drawings only. Contact Hydro International for site specific drawings.
2. The diameter of the inlet and outlet pipes may be no more than 24".
3. Multiple inlet pipes possible (refer to project plan).
4. Inlet/outlet pipe angle can vary to align with drainage network (refer to project plan.s)
5. Peak flow rate and minimum height limited by available cover and pipe diameter.
6. Larger sediment storage capacity may be provided with a deeper sump depth.

PARTS LIST

ITEM	QTY	SIZE (in)	SIZE (mm)	DESCRIPTION
1	1	48	1200	I.D. PRECAST MANHOLE
2	1			INTERNAL COMPONENTS (PRE-INSTALLED)
3	1	30	750	FRAME AND COVER (ROUND)
4	1	24 (MAX)	600 (MAX)	OUTLET PIPE (BY OTHERS)
5	1	24 (MAX)	600 (MAX)	INLET PIPE (BY OTHERS)

PLANNING BOARD APPROVAL REQUIRED BY SPECIAL PERMIT UNDER ZONING BYLAW, ARTICLES 7, 14 & 15

SIGNATURE	DATE

PREPARED FOR

SIMEONE ASSOCIATES LP
56 COLPITTS ROAD
WESTON, MA

ADVANCED CONCEPTS ENGINEERING
305 Bear Hill Road Office: (508) 699-6507
Hillsborough, NH 03244 Mobile: (617) 899-1504

PROJ. NO.	79.06
SCALE	1"=80'
DRAWN BY	DRC
DESIGNED BY	DRC
CHECKED BY	
APPROVED BY	DRC
DATE:	4/30/2023

REVISIONS

PER PEER REVIEW COMMENTS	9/15/2023
PLANNING BOARD HEARING	9/27/2023
PLANNING BOARD HEARING	10/11/2023
PLANNING BOARD HEARING	10/25/2023

COMMONWEALTH OF MASSACHUSETTS DANA R. CLOW No. 40598 REGISTERED PROFESSIONAL ENGINEER

CONSTRUCTION NOTES & DETAILS 4

WAREHOUSE DEVELOPMENT
GREEN STREET, WRENTHAM. MA

C7.3

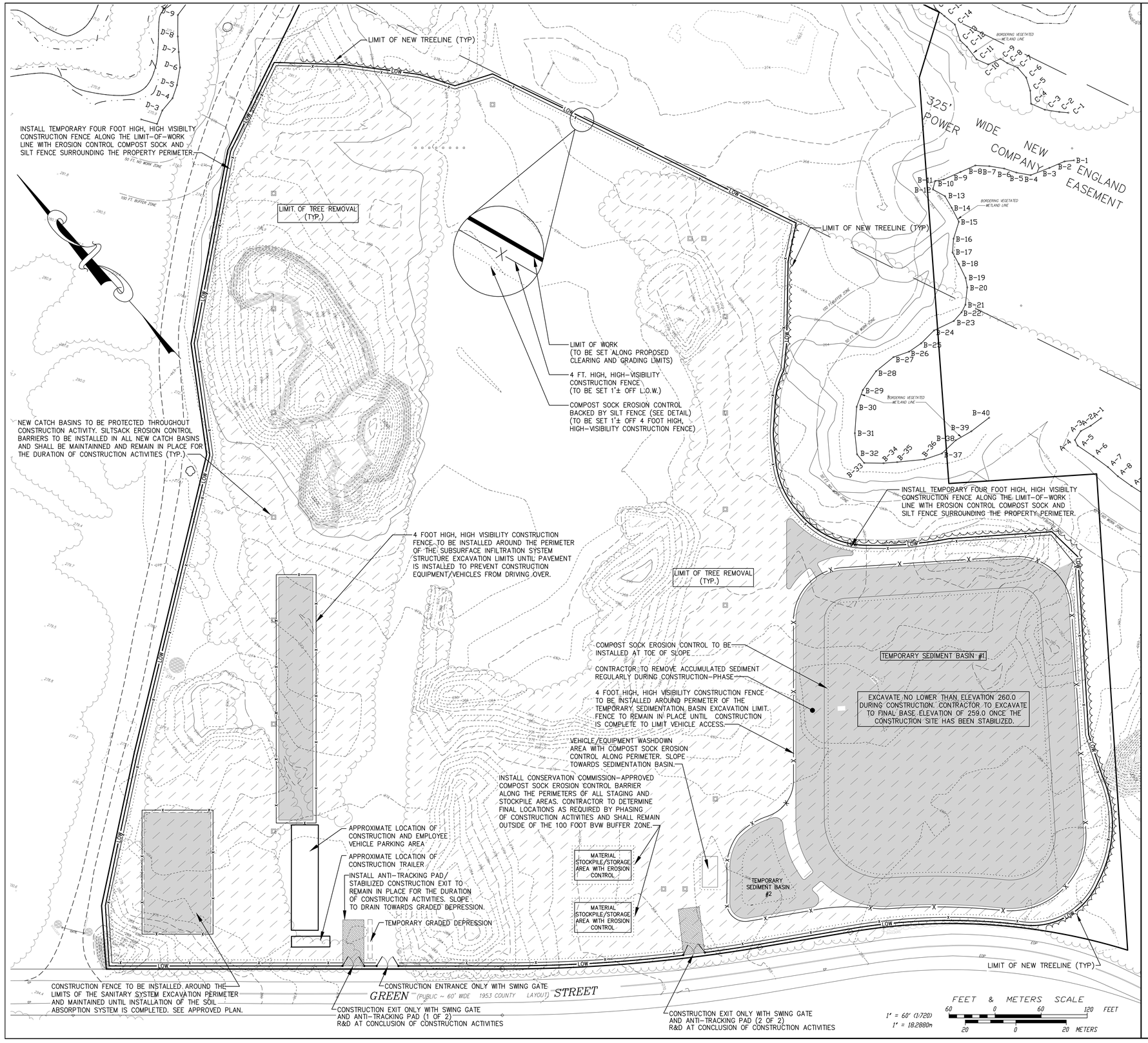

ZONING REFERENCE: C2 – COMMERCIAL/INDUSTRIAL DISTRICT 2
AQUIFER PROTECTION DISTRICT

ASSESSOR'S REFERENCE: MAP, BLOCK, PARCEL J-03-2-3

DEED REFERENCE: DEED BOOK 32401 PAGE 438 RECORDED IN NORFOLK COUNTY REGISTRY OF DEEDS

PLAN REFERENCE: PLAN NO. 174 OF 1999, BOOK 464 RECORDED IN NORFOLK COUNTY REGISTRY OF DEEDS

PLAN REFERENCE: PLAN NO. 30 OF 2006, BOOK 556 RECORDED IN NORFOLK COUNTY REGISTRY OF DEEDS

OWNER/APPLICANT: SIMEONE ASSOCIATES LIMITED PARTNERSHIP
56 COLPITTS ROAD
WESTON, MA 02493

NOTE:

ALL UNSUITABLE SOILS IDENTIFIED WITHIN THE EXCAVATION REPORTS AND/OR IDENTIFIED DURING EXCAVATION OF THE RETENTION AND RECHARGE FACILITIES SHALL BE REMOVED AND REPLACED WITH A SUITABLE NATIVE GRANULAR SOIL MATERIAL SUBJECT TO APPROVAL BY THE SITE ENGINEER.

CLEAN, GRANULAR SOIL MATERIALS EXCAVATED PURSUANT TO CONSTRUCTION OF THE BASIN SHALL BE STOCKPILED SEPARATELY FROM THOSE UNSUITABLE SOILS AND MAY BE UTILIZED AS BACKFILL WHERE UNSUITABLE MATERIALS HAVE BEEN REMOVED IN ORDER TO ACHIEVE PROPER LINES AND GRADES AS DESCRIBED IN THE APPROVED PLANS.

UNSUITABLE SOILS REMOVED FROM THE BASIN EXCAVATION SHALL BE STOCKPILED SEPARATELY FROM OTHER MATERIALS AND SHALL BE REMOVED FROM THE PROJECT SITE UNLESS DEEMED ACCEPTABLE FOR USE IN OTHER NON LOAD-BEARING AREAS OF THE SITE AS DETERMINED BY THE GEOTECHNICAL ENGINEER OR SITE ENGINEER.

SYMBOL LEGEND

	AREA TO BE EXCAVATED FOR STORMWATER MANAGEMENT
	AREA OF WOODS TO BE CLEARED
	ANTI-TRACKING PAD/STABILIZED CONSTRUCTION EXIT
	CONSERVATION COMMISSION APPROVED COMPOST SOCK BACKED BY SILT FENCE EROSION CONTROL BARRIER
—X—	4 FT. HIGH, HIGH-VISIBILITY CONSTRUCTION FENCE
—LOW—	LIMIT OF WORK (LOW)
	PROPOSED SILTSACK INLET PROTECTION DEVICE

PLANNING BOARD APPROVAL REQUIRED BY SPECIAL PERMIT UNDER ZONING BYLAW, ARTICLES 7, 14 & 15

SIGNATURE	DATE

PREPARED FOR
SIMEONE ASSOCIATES LP
56 COLPITTS ROAD
WESTON, MA

ADVANCED CONCEPTS ENGINEERING
305 Bear Hill Road Office: (508) 699-6507
Hillsborough, NH 03244 Mobile: (617) 899-1504

REVISIONS	
PER PEER REVIEW COMMENTS	9/15/2023
PLANNING BOARD HEARING	9/27/2023
PLANNING BOARD HEARING	10/11/2023
PLANNING BOARD HEARING	10/25/2023

PROJ. NO.	79.06
SCALE	1"=60'
DRAWN BY	DRC
DESIGNED BY	DRC
CHECKED BY	DRC
APPROVED BY	DRC
DATE:	4/30/2023

COMMONWEALTH OF MASSACHUSETTS DANA R. CLOW No. 40998 REGISTERED PROFESSIONAL ENGINEER

SEDIMENTATION AND EROSION CONTROL PLAN
WAREHOUSE DEVELOPMENT
GREEN STREET, WRENTHAM. MA

C8.0

ZONING REFERENCE: C2 – COMMERCIAL/INDUSTRIAL DISTRICT 2
AQUIFER PROTECTION DISTRICT

ASSESSOR'S REFERENCE: MAP, BLOCK, PARCEL J–03–2–3

DEED REFERENCE: DEED BOOK 32401 PAGE 438 RECORDED IN NORFOLK COUNTY REGISTRY OF DEEDS

PLAN REFERENCE: PLAN NO. 174 OF 1999, BOOK 464 RECORDED IN NORFOLK COUNTY REGISTRY OF DEEDS

PLAN REFERENCE: PLAN NO. 30 OF 2006, BOOK 556 RECORDED IN NORFOLK COUNTY REGISTRY OF DEEDS

OWNER/APPLICANT: SIMEONE ASSOCIATES LIMITED PARTNERSHIP
56 COLPITTS ROAD
WESTON, MA 02493

NOTE:

ALL UNSUITABLE SOILS IDENTIFIED WITHIN THE EXCAVATION REPORTS AND/OR IDENTIFIED DURING EXCAVATION OF THE RETENTION AND RECHARGE FACILITIES SHALL BE REMOVED AND REPLACED WITH A SUITABLE NATIVE GRANULAR SOIL MATERIAL SUBJECT TO APPROVAL BY THE SITE ENGINEER.

CLEAN, GRANULAR SOIL MATERIALS EXCAVATED PURSUANT TO CONSTRUCTION OF THE BASIN SHALL BE STOCKPILED SEPARATELY FROM THOSE UNSUITABLE SOILS AND MAY BE UTILIZED AS BACKFILL WHERE UNSUITABLE MATERIALS HAVE BEEN REMOVED IN ORDER TO ACHIEVE PROPER LINES AND GRADES AS DESCRIBED IN THE APPROVED PLANS.

UNSUITABLE SOILS REMOVED FROM THE BASIN EXCAVATION SHALL BE STOCKPILED SEPARATELY FROM OTHER MATERIALS AND SHALL BE REMOVED FROM THE PROJECT SITE UNLESS DEEMED ACCEPTABLE FOR USE IN OTHER NON LOAD–BEARING AREAS OF THE SITE AS DETERMINED BY THE GEOTECHNICAL ENGINEER OR SITE ENGINEER.

LEGEND

252	CONTOUR
252.35x	SPOT ELEVATION
RAMP UP	ACCESS RAMP
	GUARD RAIL
DMH–21	DRAIN MANHOLE
	PARKING AREA LIGHT
CB–2	CATCH BASIN INLET
	HYDRANT WITH GATE VALVE
	WOODEN SCREEN FENCE
	LANDSCAPE TREES
	LANDCAPE SHRUB/BUSH
CC	CEMENT CONCRETE CURB
CCB	CAPE COD BERM
BCC	BITUMINOUS CONCRETE CURB
EMH	ELECTRIC MANHOLE
FES	FLARED END SECTION
RCP	REINFORCED CONCRETE PIPE
FND	FOUND
DICL	DUCTILE IRON CEMENT LINED
SB/DH	STONE BOUND WITH DRILL HOLE

FEET & METERS SCALE

1" = 60' (1:720)
1" = 18.2880m

60 0 60 120 FEET
20 0 20 METERS

PLANNING BOARD APPROVAL REQUIRED BY SPECIAL PERMIT UNDER ZONING BYLAW, ARTICLES 7, 14 & 15	
SIGNATURE	DATE

PREPARED FOR
SIMEONE ASSOCIATES LP
56 COLPITTS ROAD
WESTON, MA

ADVANCED CONCEPTS
ENGINEERING
305 Bear Hill Road Office: (508) 699-6507
Hillsborough, NH 03244 Mobile: (617) 899-1504

REVISIONS

PER PEER REVIEW COMMENTS	9/15/2023
PLANNING BOARD HEARING	9/27/2023
PLANNING BOARD HEARING	10/11/2023
PLANNING BOARD HEARING	10/25/2023

PROJ. NO.	79.06
SCALE	1"=80'
DRAWN BY	DRC
DESIGNED BY	DRC
CHECKED BY	DRC
APPROVED BY	DRC
DATE:	4/30/2023

COMMONWEALTH OF MASSACHUSETTS
DANA R. CLOW
CIVIL
No. 40998
REGISTERED PROFESSIONAL ENGINEER
4-30-23

EROSION CONTROL NOTES AND DETAILS

WAREHOUSE DEVELOPMENT
GREEN STREET, WRENTHAM. MA

C9.0

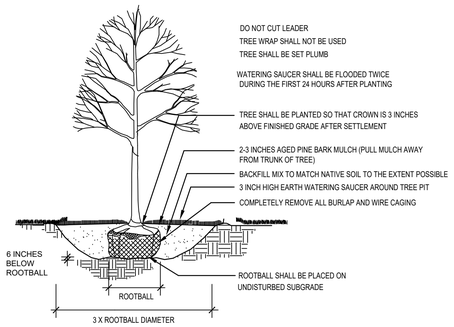

DECIDUOUS TREE PLANTING

NOT TO SCALE

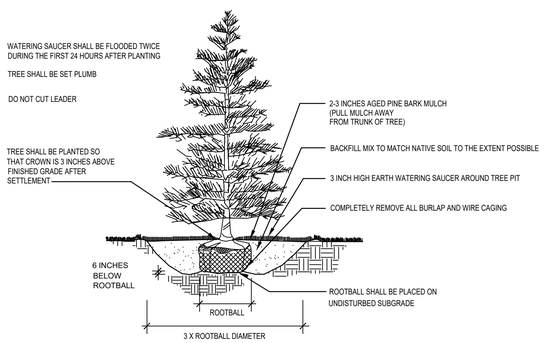

EVERGREEN TREE PLANTING

NOT TO SCALE

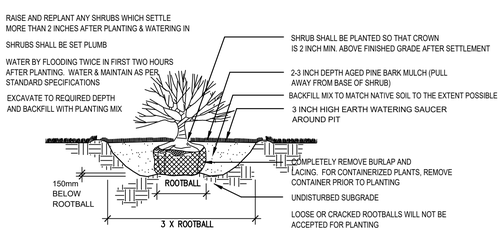

SHRUB PLANTING

NOT TO SCALE

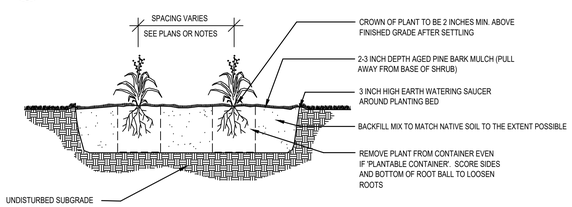

PERENNIAL PLANTING

NOT TO SCALE

Ernst Conservation Seeds
8884 Mercer Pike
Meadville, PA 16335
(800) 873-3321 Fax (814) 336-5191
www.ernstseed.com

Date: May 17, 2022

Retention Basin Floor Mix - Low Maintenance - ERNMX-126

	Botanical Name	Common Name
20.00 %	*Panicum clandestinum, Tioga*	Deertongue, Tioga
20.00 %	*Puccinellia distans, Fults*	Alkaligrass, Fults
18.00 %	*Elymus virginicus, Madison-NY Ecotype*	Virginia Wildrye, Madison-NY Ecotype
15.00 %	*Agrostis stolonifera, 'Penncross'*	Creeping Bentgrass, 'Penncross'
15.00 %	*Poa paluistris*	Fowl Bluegrass
10.00 %	*Carex vulpinoidea, PA Ecotype*	Fox Sedge, PA Ecotype
1.00 %	*Carex scoparia, PA Ecotype*	Blunt Broom Sedge, PA Ecotype
1.00 %	*Juncus effusus*	Soft Rush
100.00 %		

PLANTING NOTES

1. FURNISH AND INSTALL PLANTS AS SHOWN. CONTRACTOR SHALL BE RESPONSIBLE FOR QUANTITY OF SHRUBS GRAPHICALLY SHOWN ON PLANS. IF THERE IS A DISCREPANCY BETWEEN PLANT LIST QUANTITIES AND GRAPHICS, THE GRAPHIC SHALL TAKE PRECEDENCE.
2. PRIOR TO THE START OF EXCAVATION FOR THE PROJECT BOTH ON AND OF THE SITE, THE CONTRACTOR SHALL NOTIFY DIGSAFE AND BE PROVIDED A DIGSAFE NUMBER INDICATING THAT EXISTING UTILITIES HAVE BEEN LOCATED AND MARKED.
3. CONTRACTOR SHALL BEGIN 90 DAY MAINTENANCE PERIOD IMMEDIATELY UPON PLANTING AND WILL CONTINUE UNTIL FINAL ACCEPTANCE.
4. CONTRACTOR SHALL VERIFY TREE REMOVALS WITH LANDSCAPE ARCHITECT PRIOR TO CONSTRUCTION START.
5. CONTRACTOR SHALL MAINTAIN POSITIVE DRAINAGE AWAY FROM BUILDING FOUNDATIONS, STRUCTURES, AND PLANTING BEDS.
6. MAXIMUM SLOPE WITHIN DISTURBED AREAS SHALL NOT EXCEED 3:1, UNLESS OTHERWISE NOTED.
7. PLANTS SHALL BEAR THE SAME RELATIONSHIP TO FINISH GRADE AS TO ORIGINAL GRADES BEFORE DIGGING.
8. PLANT MATERIALS SHALL CONFORM TO THE GUIDELINES ESTABLISHED BY "THE AMERICAN STANDARD FOR NURSERY STOCK", PUBLISHED BY THE AMERICAN ASSOCIATION OF NURSERYMEN.
9. PLANTS TO ARRIVE AT SITE BALLED IN BURLAP OR CONTAINERIZED.
10. MULCH FOR PLANTED AREAS TO BE AGED PINE BARK: PARTIALLY DECOMPOSED, DARK BROWN IN COLOR AND FREE OF WOOD CHIPS THICKER THAN 1/4 INCH.
11. PLANTING SOIL MIX: AMEND SOIL TO MATCH EXISTING NATIVE SOIL TO THE EXTENT POSSIBLE. LOAM THOROUGHLY INCORPORATED WITH ROTTED MANURE PROPORTIONED 5 C.Y. TO 1 C.Y. OR EQUIVALENT. USE OF PEAT MOSS IS PROHIBITED.
12. THE LANDSCAPE CONTRACTOR SHALL GUARANTEE PLANT MATERIALS FOR ONE (1) FULL YEAR FROM DATE OF ACCEPTANCE. REQUEST THE LANDSCAPE ARCHITECT PROVIDE A WRITTEN LETTER OF ACCEPTANCE UPON COMPLETION OF EACH PHASE.
13. PLANT MATERIALS ARE SUBJECT TO THE APPROVAL OF THE LANDSCAPE ARCHITECT, AT THE NURSERY, AND AT THE SITE.
14. LANDSCAPE ARCHITECT TO FLAG TREES TO BE TRANSPLANTED PRIOR TO CONSTRUCTION START.
15. AREAS OF THE SITE WHICH HAVE BEEN DISTURBED AND NOT OTHERWISE DEVELOPED SHALL BE LOAMED WITH TOPSOIL TO A MINIMUM DEPTH OF 6", AND SEEDED WITH A MIX CONSISTING OF 40% PERENNIAL RYE GRASS; 30% CHEWINGS FESCUE; 30% KENTUCKY BLUEGRASS.
16. SCREENED IMAGES SHOW EXISTING CONDITIONS. WHERE EXISTING CONDITIONS LIE UNDER OR ARE IMPINGED UPON BY PROPOSED BUILDINGS AND/OR SITE ELEMENTS, THE EXISTING CONDITION WILL BE REMOVED, ABANDONDED AND/OR CAPPED OR DEMOLISHED AS REQUIRED.
17. THERE SHALL BE NO SUBSTITUTION OF PLANT SPECIES WITHOUT AUTHORIZATION BY THE LANDSCAPE ARCHITECT.
18. NO PLANTING SHALL BE INSTALLED BEFORE ACCEPTANCE OF ROUGH GRADING.
19. PLANTS TO BE THOROUGHLY WATERED AFTER INSTALLATION, AT LEAST TWICE WITHIN THE FIRST 24 HOURS. WATER TREES SUFFICIENTLY TO KEEP SOIL MOIST DURING DRY PERIODS FOR THE FIRST TWO GROWING SEASONS.

PLANT SCHEDULE

Quantity	Symbol	Latin Name	Common Name	Size	Spacing	Remarks
Shade Trees						
16	AF	Acer x freemanii 'Jeffsred'	Autumn Blaze Maple	3"-3.5" Cal.	As shown	B&B, Full, Symmetrical, High Branched
15	CO	Celtis occidentalis	Hackberry	3"-3.5" Cal.	As shown	B&B, Full, Symmetrical, High Branched
17	QR	Quercus rubra	Nothern Red Oak	3"-3.5" Cal.	As shown	B&B, Full, Symmetrical, High Branched
15	UA	Ulmus americana 'Princeton'	Princeton Elm	3"-3.5" Cal.	As shown	B&B, Full, Symmetrical, High Branched
14	ZS	Zelkova serrata 'Green Vase'	Green Vase Zelkova	3"-3.5" Cal.	As shown	B&B, Full, Symmetrical, High Branched
16	PA	Platanus x acerifolia 'Bloodgood'	Bloodgood London Plane tree	3"-3.5" Cal.	As shown	B&B, Full, Symmetrical, High Branched
Evergreen Trees						
28		Abies concolor	White Fir	6-8'	As shown	B&B
18		Ilex opaca	American Holly	6-8'	As shown	B&B
29		Pinus strobus	Eastern White Pine	6-8'	As shown	B&B
Shrubs						
78		Itea virginica 'Henry's Garnet'	Henry's Garnet Sweetspire	5 Gal.	3' O.C.	Container
501		Juniperus horizontalis 'Bar Harbor'	Bar Harbor Juniper	5 Gal.	3' O.C.	Container
Perennials, Grasses and Groundcovers						
197		Amsonia x 'Blue Ice'	Blue Star Flower	Plugs	2' O.C.	LP50 Flats
46		Eragrostis spectabilis	Purple Lovegrass	Plugs	2.5' O.C.	LP50 Flats
78		Panicum virgatum 'Shenandoah'	Shenandoah Switch Grass	Plugs	3' O.C.	LP50 Flats
56		Perovskia atriplicifolia 'Blue Spire'	Blue Spire Russian Sage	Plugs	2' O.C.	LP50 Flats
41		Rudbeckia 'American Gold Rush'	American Gold Rush Black Eyed Susan	Plugs	1.5 O.C.	LP50 Flats
86		Schizachyrium scoparium	Little Bluestem	Plugs	1.25' O.C.	LP50 Flats
159		Solidago speciosa	Showy Goldenrod	Plugs	2' O.C.	LP50 Flats

Trees for Shade Mitigation						
4	CO	Celtis occidentalis	Hackberry	3"-3.5" Cal.	As shown	B&B, Full, Symmetrical, High Branched
3	QR	Quercus rubra	Nothern Red Oak	3"-3.5" Cal.	As shown	B&B, Full, Symmetrical, High Branched
3	PA	Platanus x acerifolia 'Bloodgood'	Bloodgood London Plane tree	3"-3.5" Cal.	As shown	B&B, Full, Symmetrical, High Branched

PLANNING BOARD APPROVAL REQUIRED BY SPECIAL PERMIT UNDER ZONING BYLAW, ARTICLES 7, 14 & 15

SIGNATURE	DATE

Industrial Development, 275 Green Street

Wrentham, MA

Client

Simeone Associates LP
56 Colpitts Road
Weston, MA

Civil Engineer

Advanced Concepts Engineering
305 Bear Hill Road
Hillsborough, NH 03244-5544

Landscape Architect

Radner Design Associates, Inc.
3 Allied Drive, Suite 303
Dedham, MA 02026
508.736.6144
www.RadnerDesign.com

09.27.23 Planning Board
08.28.23 Peer Review
Revision:

Drawn: kc

Checked by: mr

Scale: NTS

Sheet Name:
Notes and Details

Project No.:
23-08

Issue Date:
04.30.2023

Sheet No.:
L0.0

Drawings and Designs © 2023 Radner Design Associates, Inc.

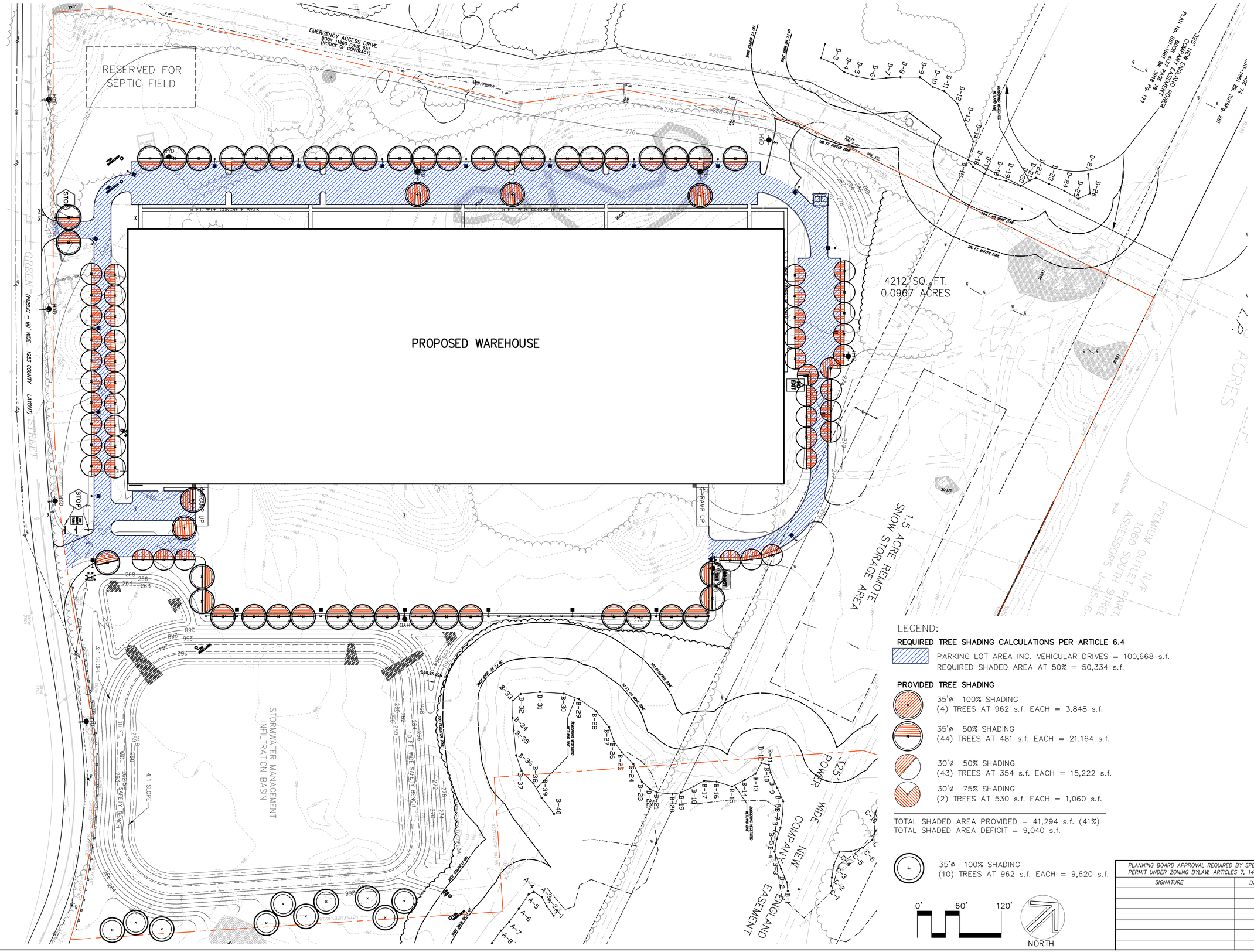

PLANNING BOARD APPROVAL REQUIRED BY SPECIAL PERMIT UNDER ZONING BYLAW, ARTICLES 7, 14 & 15	
SIGNATURE	DATE

Industrial Development, 275 Green Street

Wrentham, MA

Client

Simeone Associates LP
56 Colpitts Road
Weston, MA

Civil Engineer

Advanced Concepts Engineering
305 Bear Hill Road
Hillsborough, NH 03244-5544

Landscape Architect

Radner Design Associates, Inc.

3 Allied Drive, Suite 303
Dedham, MA 02026
508.736.6144
www.RadnerDesign.com

MASSACHUSETTS MICHAEL F. RADNER REGISTERED LANDSCAPE ARCHITECT

09.27.23 Planning Board
08.28.23 Peer Review
Revision:

Drawn: kc

Checked by: mr

Scale: 1"=60'-0"

Sheet Name:
Parking Lot Shading Calculation Plan

Project No.:
23-08

Issue Date:
04.30.2023

Sheet No.:
L1.0

Drawings and Designs © 2023 Radner Design Associates, Inc.

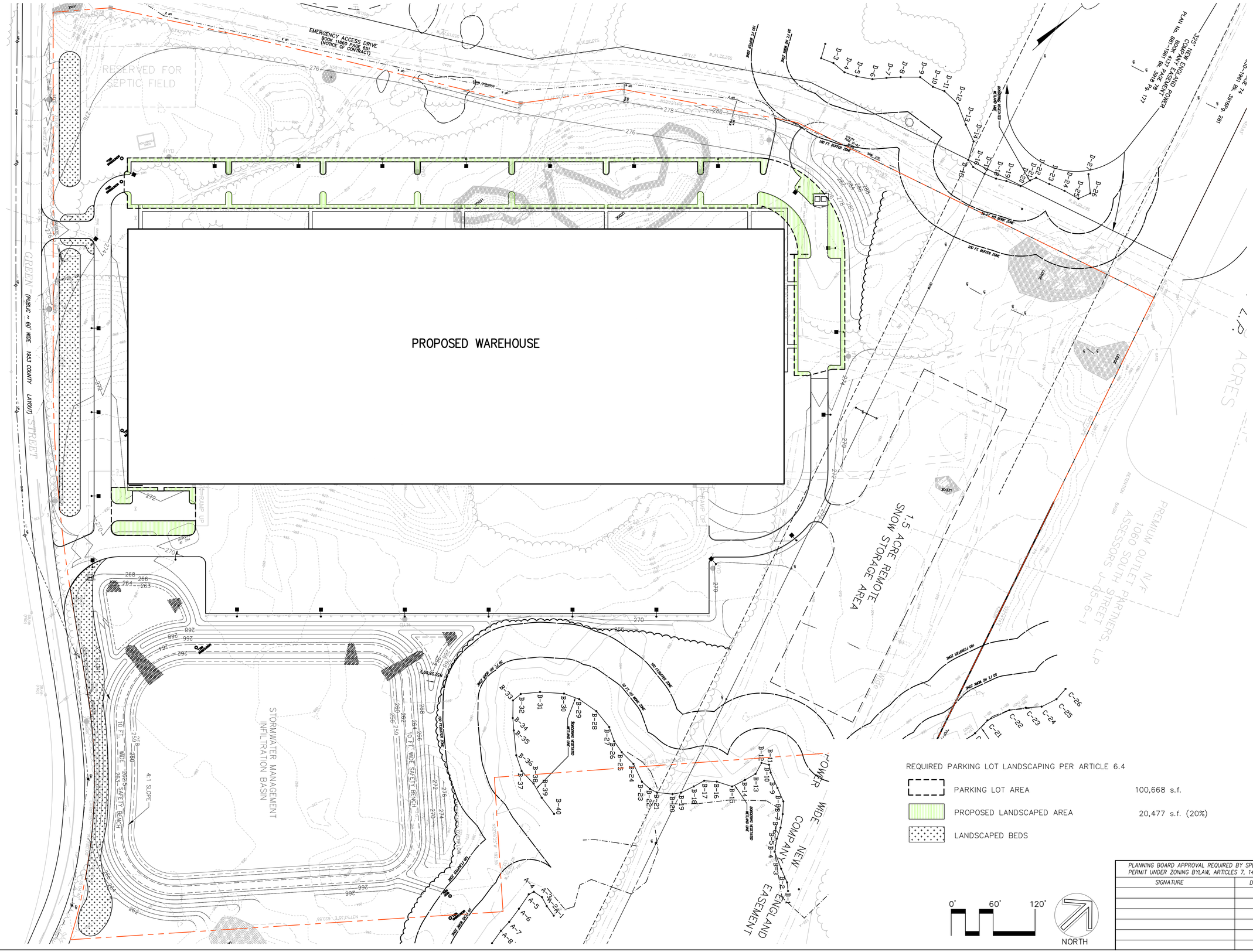

PLANNING BOARD APPROVAL REQUIRED BY SPECIAL PERMIT UNDER ZONING BYLAW, ARTICLES 7, 14 & 15	
SIGNATURE	DATE

Industrial Development, 275 Green Street

Wrentham, MA

Client

Simeone Associates LP
56 Colpitts Road
Weston, MA

Civil Engineer

Advanced Concepts Engineering
305 Bear Hill Road
Hillsborough, NH 03244-5544

Landscape Architect

Radner Design Associates, Inc.

3 Allied Drive, Suite 303
Dedham, MA 02026
508.736.6144
www.RadnerDesign.com

09.27.23 Planning Board
08.28.23 Peer Review
Revision:

Drawn: kc

Checked by: mr

Scale: 1"=60'-0"

Sheet Name:
Parking Lot Landscape Calculation

Project No.:
23-08

Issue Date:
04.30.2023

Sheet No.:
L1.1

Drawings and Designs © 2023 Radner Design Associates, Inc.

Industrial Development, 275 Green Street

Wrentham, MA

Client

Simeone Associates LP

56 Colpitts Road
Weston, MA

Civil Engineer

Advanced Concepts Engineering

305 Bear Hill Road
Hillsborough, NH 03244-5544

Landscape Architect

Radner Design Associates, Inc.

3 Allied Drive, Suite 303
Dedham, MA 02026
508.736.6144
www.RadnerDesign.com

MASSACHUSETTS MICHAEL F. RADNER REGISTERED LANDSCAPE ARCHITECT

09.27.23 Planning Board
08.28.23 Peer Review
Revision:

Drawn: kc

Checked by: mr

Scale: 1"=60'-0"

Sheet Name:
Planting Plan

Project No.:
23-08

Issue Date:
04.30.2023

Sheet No.:
L2.0

Drawings and Designs © 2023 Radner Design Associates, Inc.